Section 3
Guidelines for Forest Roads

PART 1. OVERVIEW 2
PART 2. ROAD MAINTENANCE AND ABANDONMENT PLANNING 2
2.1 Road Maintenance and Abandonment Plans 2
2.2 Changes in Ownership 9
2.3 Family Forest Fish Passage Program 9
PART 3. ROAD LOCATION AND DESIGN 9
3.1 Location BMPs 9
3.2 Design BMPs 10
Figure 3.1 Road shape designs 11
Table 3.1 Comparison Chart for Road Shape 12
PART 4. ROAD CONSTRUCTION AND MAINTENANCE 13
4.1 General Construction BMPs 13
4.2 Compaction and Stabilization 13
4.3 Erosion Control 14
4.4 Sediment Control 15
4.5 Vegetation BMPs 15
4.6 Grading 16
4.7 Roadside Vegetation Maintenance 16
PART 5. LANDINGS 17
PART 6. DRAINAGE STRUCTURES 27
Table 3.2 Comparison of Drainage Structures 28
6.1 Relief Culverts 28
6.2 Dips 29
Figure 3.2 Diagram of a rolling dip 29
6.3 Water Bars 29
Figure 3.3 Diagram of a water bar 30
6.4 Drainage Diversions 30
Figure 3.4 Diagram of rubber strip diversion structure 31
6.5 Ditches 31
6.6 Energy Dissipaters 31
PART 7. ROAD ABANDONMENT 32
7.1 Prioritizing Roads for Abandonment 32
7.2 Side Cast and Fill Removal BMPs 32
7.3 Water Crossing Removal BMPs 32
7.4 Drainage BMPs 33
PART 8. ROCK PITS AND QUARRIES 33
GLOSSARY 34
Figure 3.5 Diagram demonstrating full bench construction. 34
Figure 3.6 Diagram showing the road prism. 35
RESOURCES 36

PART 1. OVERVIEW

Background

Historically, studies have identified forest roads as sources of sediment delivery to streams in Washington's forests. Roads can deliver sediment for a variety of reasons including past practices, neglected maintenance, natural processes, and catastrophic events.

Introduction

This manual provides guidelines to help implement the forest practices road construction and maintenance rules. Correct implementation of current forest practices rules is assumed to minimize runoff water and sediment delivery to typed waters.

Research has demonstrated that well designed and properly maintained roads minimize impacts to public resources and at the same time, reduce operating costs. This manual includes Best Management Practices (BMPs) for forest road location, design, construction, and maintenance (which includes abandonment). The BMPs are grouped into types of activity. For example, ditch construction and maintenance are both under the topic "Ditches."

The listed BMPs will not address every situation nor are all BMPs appropriate for every road. The intent of the BMPs is to provide decision makers with as much flexibility and choice as possible in planning road design, construction, and maintenance activities. If the listed BMPs do not address your situation, you may propose site-specific solutions to the Department of Natural Resources (DNR).

Use of BMPs depends on many factors, including the potential to cause damage to a public resource. For example, timber hauling on a road near a stream may require a higher level of maintenance than a road located away from a stream.

A forest practice activity that includes construction or performance of work within the stream bed or bank of any S, F or N Water is considered a forest practices hydraulic project (FPHP) and may require a FPA (see WAC 222-16-050). For guidelines on planning and designing hydraulic projects, see Board Manual Section 5, Guidelines for Forest Practices Hydraulic Projects.

The manual also provides information on Road Maintenance and Abandonment Plans (RMAPs) and the Family Forest Fish Passage Program. All italicized words are in the attached glossary.

PART 2. ROAD MAINTENANCE AND ABANDONMENT PLANNING

2.1 Road Maintenance and Abandonment Plans

Road maintenance and abandonment plans (RMAPs) are required for all forest landowners. Large forest landowners must prepare a full RMAP for all of their ownership per WAC 222-24-051 and small forest landowners must follow the RMAP requirements in WAC 222-24-0511. Landowners submit RMAPs to the DNR.

Forest landowners are responsible for maintaining all of their forest roads to the extent necessary to prevent potential or actual damage to public resources. This includes both forest roads listed within an RMAP and those forest roads that are exempt from RMAP requirements, such as 80/20 small forest landowners (SFL). The 80/20 SFLs are those who own a total of eighty acres or less of forest land and are not required to submit an RMAP for any block of forest land that contains

twenty contiguous acres or less (WAC 222-24-0511). The type and extent of an RMAP depends on whether a landowner is classified as a **large** or **small** forest landowner. See WAC 222-16-010, for the complete definition of "forest landowner."

Large forest landowners are defined in rule as harvesting more than two million board feet of timber per year from their forest land in Washington State. Large forest landowner RMAP requirements are described in WAC 222-24-051.

- All large forest landowner forest roads under ownership at that time were included in approved RMAPs by July 1, 2006. Part 2.2 of this manual addresses how landowners amend RMAPs to include forest lands acquired since 2006.
- Road work in the approved RMAPs need to be completed by October 31, 2016 or by the extension deadline October 31, 2021 if approved by DNR per WAC 222-24-051(8).

Small forest landowners are defined in rule as landowners that:

- Harvest an annual average of two million board feet or less of timber from their forest land in Washington State;
- Have harvested at this level for the past three years; and
- Do not plan to exceed this annual average harvest level for the next 10 years, WAC 222-16-010.

For SFLs that do not meet an exemption to increase their annual timber harvest level over two million board feet, an RMAP will be required for their property (RCW 76.13.120).

SFL RMAP requirements are based on the size of forest land holdings (WAC 222-24-0511).

- DNR provides all SFLs with an educational brochure outlining road maintenance standards and requirements, regardless of whether or not the landowner has an RMAP or is required to complete a checklist RMAP with their forest practices application/notification (FPA/N) for harvest (RCW 76.09.420).
- No RMAP is required for 80/20 SFLs.
- A checklist RMAP is required with each FPA/N for timber harvest (including salvage) for SFLs that have ownership greater than 80 acres or have an individual parcel more than 20 contiguous acres.
- If an SFL submits an RMAP, other than a checklist RMAP, the following options apply:
  - Follow the RMAP schedule.
  - Ask DNR to approve changes to the RMAP schedule.
  - Cancel the RMAP by providing written notification to DNR. After cancelation of a RMAP all future timber harvest FPA/Ns must include an RMAP checklist.

RMAP Review

The Departments of Ecology and Fish and Wildlife, affected tribes, and interested parties (stakeholders) have the opportunity to review existing approved RMAPs, revised RMAPs prepared for extension requests, and annual work plans and schedules for forest landowner road systems. Formal review opportunities for stakeholders will be offered prior to DNR's decision to approve/disapprove an RMAP extension and/or annual work plans. Early, informal communication is encouraged between forest landowners and stakeholders about road concerns and priorities to help prepare all parties for the review.

Stakeholders will receive copies of all written documentation addressing changes to approved RMAPs.

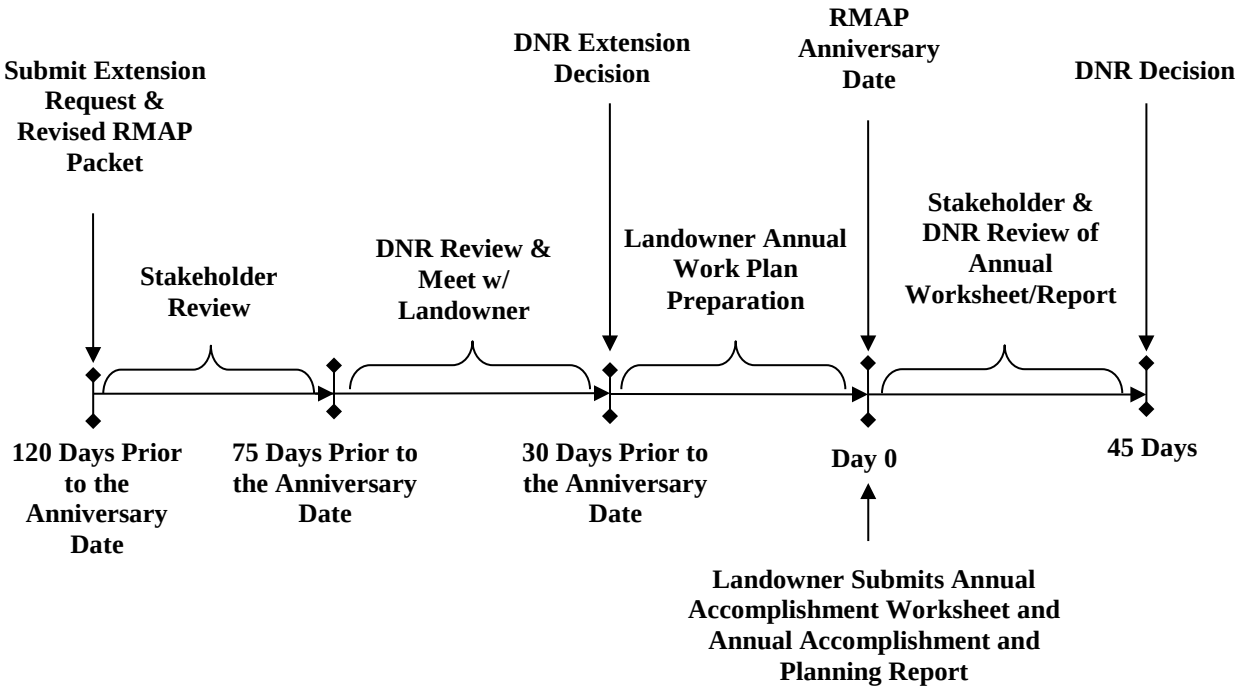

RMAP Extension

Large forest landowners operating under an RMAP, and small forest landowners who choose to operate under an RMAP, may apply for an extension of their RMAP completion deadline for up to five years (October 31, 2021). Landowners are strongly encouraged to provide adequate time for DNR and all other reviewers to assess the extension area for the revised RMAP. If the landowner's property is not accessible due to conditions such as inclement weather conditions, the extension may not be approved. Landowners are encouraged to submit their extension requests as early as possible. The last date an RMAP extension can be requested is 120 days prior to the initial RMAP's anniversary date in 2014. Upon receipt of a complete extension request, stakeholders will have at least 45 days to review a revised RMAP. See timeline below.

Requests for an RMAP extension require a revised RMAP that contains the following:

- Extension request form,
- Prioritization and tracking form,
- Maintenance and storm strategy form,
- Accomplishment scheduling worksheet (this schedule demonstrates all remaining RMAP work that will be completed through the extension performance period),
- Annual accomplishment and planning report (summary of all RMAP work), and
- Map(s), specific to the extension request area, showing fish passage barriers and road segments requiring work.

All the standardized forms listed above and detailed instructions on how to fill out the forms are available on DNR's website at www.dnr.wa.gov/BusinessPermits/Topics/ForestPracticesApplications/Pages/fp_forms.aspx.

The revised RMAP needs to contain the following elements documented on the applicable forms and map(s):

1. An adjusted RMAP accomplishment scheduling worksheet describing how remaining work will be completed on a generally even-flow basis by the extension deadline. The RMAP accomplishment schedule shows how all remaining work will be prioritized using the worst first principle (how the worst problems will be addressed as the highest priority per WAC 222-24-051(3), (4) and (6)), see *Prioritizing RMAP Work* section below. Required road work that is scheduled needs to correspond with locations shown on the forest landowners' maps.

2. Assessment and documentation on the RMAP accomplishment scheduling worksheet of all remaining fish passage barriers, including the dates that fish passage barriers have been removed or fixed. The accomplishment scheduling worksheet needs to demonstrate how the work is being completed consistently on a generally even-flow basis throughout the remaining performance period. This will avoid planning and completing a disproportionate majority of the work at the end of the extended RMAP performance period. Scheduled fish passage barrier work needs to correspond with point locations shown on the forest landowners' maps.

3. Maps showing an inventory of existing conditions for the road system. Road locations need to correspond to the work listed in the adjusted scheduling worksheet. For consistent reporting, use DNR Section or Township base maps (or other comparable map(s); or DNR compatible GIS map products). DNR will accept a range of map(s) from 1:12,000 through 1:60,000 scale. The following elements need to be included on each map:
   - Current existing RMAP boundary as well as the boundaries for the RMAP extension area(s).
   - All forest roads including:
     - Roads and/or road segments requiring work to meet forest practices rule standards.
     - Roads and/or road segments proposed for abandonment (WAC 222-24-052(3)).
     - Stream adjacent parallel roads (identify segments) (WAC 222-16-010).
     - Orphaned roads, and specify those with potential resource risks.
   - All fish passage barrier locations.
   - Type A and B wetlands, as identified on the DNR forest practices wetland GIS layer that lie adjacent to or are crossed by roads.
   - Stream locations and water type(s) as identified on the DNR hydrography GIS layer.

   Landowners may place additional work elements on the map that have been included in their RMAP accomplishment scheduling worksheet, such as replacing or removing undersized water crossing structures (non fish) or other road work necessary to minimize sedimentation to typed waters or wetlands (e.g., sidecast pullback, surface water management, etc.).

Field Assessment and Screening

Landowners will need to complete an on-the-ground assessment of any portion of the road system that has not already been assessed or when the initial assessment has been rendered inadequate because of major changes that occurred before the RMAP work was complete (e.g., storm damage, landslides or new property acquisition).

The on-the-ground assessment should include, but is not limited to review of the following elements associated with each road segment not meeting current forest practices rule standards:

1. Barriers to fish passage. Water crossing structures need to pass all fish at all life stages (WAC 222-24-010(2)).

2. Undersized culverts or other inadequate water crossing structures on non-fish habitat streams.

3. Mass wasting (landslides) from unstable areas that are affected by roads and threaten public resources and/or public safety.

4. Sediment delivery to typed waters or wetlands.

5. Stream adjacent parallel roads.

6. Interruption of natural drainage patterns where roads intercept springs, seeps, and typed water; including water that is routed out of its natural channel or flow pattern.

7. Road ditches that drain into streams or wetlands.

Refer to the maintenance and storm strategy form for more detailed guidance on road assessment. The form is located at www.dnr.wa.gov/BusinessPermits/Topics/ForestPracticesApplications/Pages/fp_forms.aspx.

Prioritizing RMAP Work

Prioritization needs to address the worst situations first, that is, on areas with the highest potential to damage public resources. Prioritization can take place after landowners assess road improvement work needed. In assessing priorities, landowners should consider locations where many small problems exist, and when combined, increase the potential to harm public resources at the watershed scale. Landowners are encouraged to work with the Departments of Ecology and Fish and Wildlife, affected tribes, and interested parties on prioritizing their RMAP work; this will facilitate the efficiency of RMAP review.

Work schedules within RMAPs should be based on each landowner's RMAP priorities (not necessarily in this order):

1. Restoration of fish passage beginning with barriers that affect the most stream miles of fish habitat above the blockage.

2. Repair or maintenance work to reduce sediment delivery from surface erosion and/or mass wasting.

3. Repair or maintenance work to disconnect road drainage(s) from streams.

4. Repair, maintenance, relocation, or abandonment of stream-adjacent parallel roads with an emphasis on reducing water and sediment delivery from the road to the stream.

5. Repair or maintenance work which keeps streams in their natural channels, route groundwater onto the forest floor, and drains ditchwater onto the forest floor and not into the stream.

6. Repair or maintenance work which can be undertaken with the maximum operational efficiencies, getting the maximum amount of work done with available landowner funds, and achieving the most improvement in resource protection as early as possible in the planning period.

RMAP Annual Review

Each year on the anniversary date of the plan's submittal, landowners need to report in the forms listed below a current RMAP summary, work accomplishments for the previous year, work proposed for the upcoming year. Any modifications, including storm damage, landslides or new property acquisition (Part 2.2), need to be incorporated into both forms

- Annual accomplishment and planning report (summary of all RMAP work), and
- Accomplishment scheduling worksheet (work accomplishments for the previous year, work proposed for the upcoming year, and any modifications to the existing plan)

The forms and instructions on how to fill out these forms are available on DNR's website at www.dnr.wa.gov/BusinessPermits/Topics/ForestPracticesApplications/Pages/fp_forms.aspx.

The annual accomplishment and planning report needs to illustrate the cumulative progress towards achieving the scheduled RMAP goal to determine if even flow is being met through reporting the percentage of roads improvement completed in each road management block contained within landowners RMAP. In order to meet the requirements in WAC 222-24-051, the annual accomplishment and planning report and the accomplishment scheduling worksheet need to include the following:

1. An annual accomplishment and planning report identifying:
   - Total miles of road within the plan, as well as miles of completed road improvement from the previous year and proposed road improvement for the upcoming year.
   - Total miles of roads needing abandonment, as well as miles of completed road abandonment from the previous year and proposed road abandonment for the upcoming year.
   - Total miles of orphan road within the plan, as well as miles of orphan road mitigated from the previous year and roads proposed for mitigation in the upcoming year.
   - Total number of fish passage barriers within the current RMAP.
   - Total number of fish passage barriers that have been removed/fixed from the previous year and barriers that have been proposed to be removed/fixed in the upcoming year.
   - Approximate number of stream miles of fish habitat access restored.

   Locations of the RMAP work listed above needs to be documented on Geographic Information System (GIS) shapefile, electronic spreadsheet, and/or paper map(s).

2. All scheduled work within the last planning period that was not completed as specified on the accomplishment scheduling worksheet. The accomplishment scheduling worksheet needs to show how this work has been rescheduled for completion in subsequent years.

3. Any additional information pertaining to work that needs to be added or removed on the plan (e.g., purchasing new lands, storm damage, or unforeseen circumstances that have altered existing road networks that have not been brought up to forest practices rule standards) needs

to be explained on the annual accomplishment and planning report and added to the accomplishment scheduling worksheet.

4. Detailed scheduling information relating to work that is to occur within the next year (i.e., before the next accomplishment scheduling worksheet).

The DNR, in consultation with Departments of Ecology and Fish and Wildlife, affected tribes, and other interested parties will review the progress of the RMAP on an annual basis to determine if the RMAP is being implemented as approved. The DNR will notify the landowner about any concerns that may need further work or approval within 45 days of receiving the annual accomplishment and planning report and accomplishment scheduling worksheet.

Review and Reporting of RMAP Data

Data is reported by landowner's on revised RMAPs, annual reports and schedules, and is reviewed by DNR, landowners, and stakeholders. Landowner RMAP information is submitted to DNR on standardized forms, paper maps, electronic spreadsheet(s), and/or GIS spatial formats. After verifying that RMAP reports are complete and include all required elements, DNR will distribute the RMAP materials to the stakeholders for review.

The DNR distributes to stakeholders and publishes the annual forest practices habitat conservation plan (HCP) report summarizing annual RMAP work accomplished. The annual RMAP accomplishment report consists of RMAP data collected by each region which is combined to provide stakeholders with a statewide picture of the RMAP program status. The annual forest practices HCP report is located on DNR's Forest Practices website at http://www.dnr.wa.gov/BusinessPermits/ForestPractices/Pages/Home.aspx.

DNR has created an RMAP database to track large landowners' progress towards meeting RMAP obligations. RMAP stakeholders can use the database to review the work being completed by landowners on their RMAP(s). A year is assigned to each data location, communicating when the work is planned or was completed. This database can be represented spatially in GIS which will allow stakeholders to run limited queries on a watershed basis. This database and its narrative can be found on the DNR's website at www.dnr.wa.gov/BusinessPermits/ForestPractices/Pages/Home.aspx.

RMAP Completion

Landowner's RMAPs will be considered complete when all roads within the RMAP have been brought up to forest practices rules standards and validated by DNR. The following elements describe the process DNR will follow.

- DNR will consult with the Departments of Ecology and Fish and Wildlife, affected tribes, and interested parties prior to issuing a final acceptance of the RMAP.
- DNR will provide, in writing, confirmation to the landowner that the RMAP(s) is complete.
- Written confirmation of completion will be distributed to the Departments of Ecology and Fish and Wildlife, affected tribes, and interested parties.

Upon completion of an RMAP, landowners will maintain all existing roads according to forest practices rules standards.

2.2 Changes in Ownership

An approved RMAP is a continuing forest land obligation only for large forest landowners per WAC 222-20-055.

If you are a large forest landowner and purchase forest land with an RMAP, you have the following options:

- Follow the RMAP schedule.
- Ask DNR to approve changes to the RMAP schedule.

If you are a **large** forest landowner and purchase forest land without an RMAP, contact DNR for assistance in developing a plan and maintenance schedule.
If you are a **small** forest landowner and purchase land with an RMAP (other than a checklist RMAP), you have the following options:

- Follow the RMAP schedule.
- Ask DNR to approve changes to the RMAP schedule.
- Ask DNR to cancel the RMAP.

2.3 Family Forest Fish Passage Program

Small forest landowners are eligible for the Family Forest Fish Passage Program. This voluntary cost-share program provides financial assistance for removing *fish passage barriers* and replacing them with fish passable structures. The *fish passage barrier* must be located on forest land and cross a Type S or F Water.

A *fish passage barrier* is determined by the state and is any artificial (human-caused) in-stream structure that impedes the free passage of fish. "Fish" includes all life stages of resident and anadromous fish. Cost share rates range from 75%-100%.

For an application and information, see www.dnr.wa.gov/fffpp or contact the Small Forest Landowner's Office at any DNR region office.

PART 3. ROAD LOCATION AND DESIGN

(Rules are in WAC 222-24-015, WAC 222-24-020, and WAC 222-24-026.)

The location of a road may have long-term effects on construction and maintenance costs, safety, and public resources. A well located, designed, and constructed road balances current and future needs with construction and maintenance costs. Base the final road location on field verified information, BMPs, and local knowledge.

3.1 Location BMPs

When necessary to cross water, find the optimal water crossings first~~. See 6.1 General Water Crossing BMPs. Then~~ and locate roads to:

- Utilize topographic features such as benches, ridges, and saddles.
- Use natural grade breaks to locate drainage structures. This prevents long continuous ditches.
- Avoid crossing or constructing roads adjacent to wetlands. When wetlands are present, refer to WAC 222-24-015(1) for an ordered list of choices for road location and construction. Recommendations on wetland restoration, enhancement or replacement are in Board Manual Section 9, Guidelines for Wetland Replacement by Substitution or Enhancement.

- Disconnect the road drainage from typed waters.

Reduce risks to public resources by minimizing the amount of roads in the following locations:

- On side slopes greater than 60%.
  - If you plan to construct roads in these areas, you may be required to use *full bench construction* techniques.
- On unstable slopes and landforms. For guidance, see Board Manual Section 16, Guidelines for Evaluating Potentially Unstable Slopes and Landforms.
  - If you plan to construct roads in these areas, you may need to perform additional environmental review (see WAC 222-16-050, Class IV-special).
- In areas with a history of road failures or slides.
  - If you plan to construct roads in these areas, research the factors that contributed to the failures and plan to avoid past road location, construction and maintenance techniques. You may be required to perform additional environmental review (see Board Manual Section 16, Guidelines for Evaluating Potentially Unstable Slopes and Landforms and WAC 222-16-050, Class IV-special).
- Within 200 feet of typed waters.
  - Note: New stream adjacent parallel roads require an ~~ID~~ interdisciplinary team.
- In or near seeps and springs.
  - If you plan to construct roads through seeps and springs, maintain the natural flow patterns around them. The flow pattern often has wetland indicator plants and soils.

3.2 Design BMPs

Once you have selected a road location, design the road to minimize sediment delivery to typed waters by:

- Including adequate drainage structures for anticipated surface and intercepted sub-surface flow.
- Ensuring the sub-grade and surface can support log and rock haul during the planned season of road use.
- Not constructing sunken roads. These are roads lower than the surrounding ground level, and do not drain properly. Sunken roads occur on gently sloped land where cut and fill is unnecessary. In these locations, it may be necessary to build up the road surface so that water drains away from the road surface.
- Incorporating grade breaks to avoid long, continuous road grades.

Design the road shape (crowned, inslope, outslope) to support the anticipated haul of timber, rock, etc. Figure 3.1 shows cross section views of road sub-grades by type of road shape. Table 3.1 offers a comparison chart to help determine the best road design for your location.

Crowned

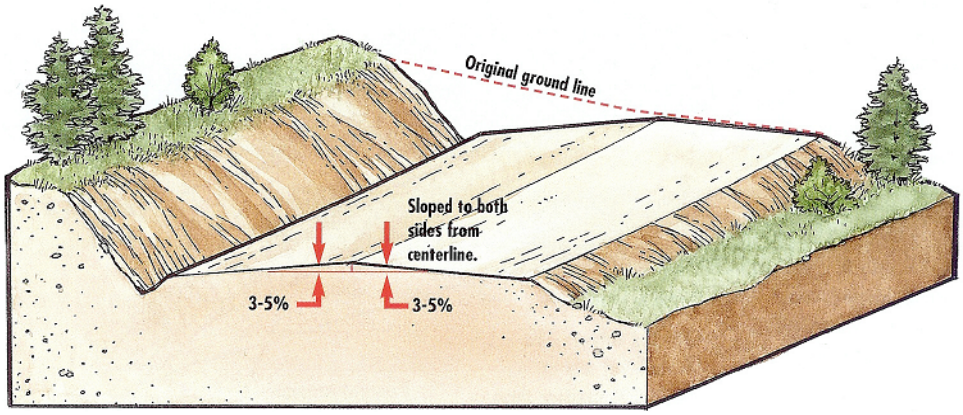

Inslope

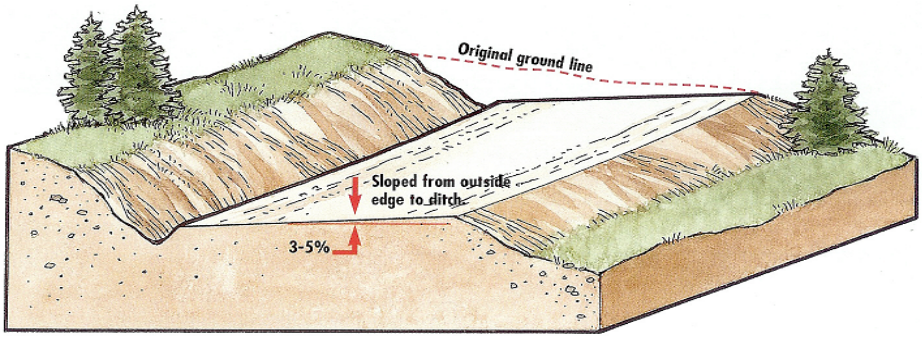

Outslope

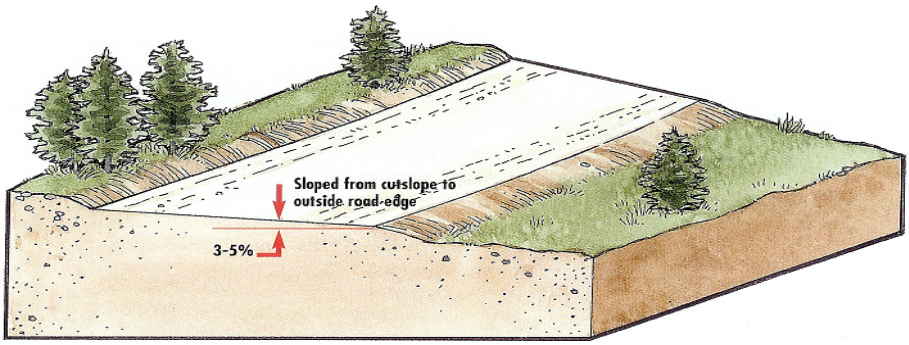

Figure 3.1 Road shape designs

Table 3.1 Comparison Chart for Road Shape

	Inslope	**Outslope**	**Crown**
Road surface shape	Drains towards the **cut** slope using the road or ditches.	Drains towards the **fill** slope using dips, not ditches.	Drains **both** directions with high point in center of road.
Construction requirements	Requires more excavation and clearing.	Requires less excavation and clearing.	Will require excavation and clearing quantities between inslope and outslope.
Maintenance requirements	Road surface Ditch and relief structures	Road surface Dips Fill slopes – vegetation or stabilization	Road surface Ditch and relief structures Fill slopes – vegetation or stabilization
Erosion concerns	Road surface Ditches At relief culverts and outlets	Road surface Fill slope Dips and dip outlets	Road surface Ditches At relief culverts and outlets Fill slopes
Where to use	When keeping runoff water in the ditch is critical to controlling sediment delivery. Unstable or erodible fill slopes Steep grades When hauling in ice or snow conditions	Rocky or well drained soils Where unable to maintain ditches Stable fill slopes On temporary or spur roads that are less than 8% grade.	Unstable or erodible fill slopes Steep grades When hauling in ice or snow conditions High traffic roads
Where not to use	Where ditches and relief culverts have high probability of clogging. Where ditches cannot be constructed.	Steep road grades High traffic roads Unstable fill slopes Where safety concerns exist, such as for use during ice or snow.	In areas, where outsloping the road is adequate. Temporary roads

PART 4. ROAD CONSTRUCTION AND MAINTENANCE

Road construction techniques are important to prevent potential and actual damage to public resources.

4.1 General Construction BMPs

(Rules are in WAC 222-24-030)

- Provide road construction operators with well-marked road locations, readable road design information, and clear instructions.
- Supervise road construction operators to:
  - Ensure road width and cut depths match design specifications.
  - Respond to unanticipated circumstances.
- Construct roads when moisture and soil conditions are not likely to result in excessive erosion and/or soil movement.
- Minimize the area of soil disturbance during construction.
- Place all clearing debris and slash (such as tree limbs, stumps and brush) outside the road prism.
- For roads near typed water, place all clearing debris on the downhill side of the road at the toe of the road fill. This can trap sediment.
- New, non-compacted roads may need time to settle (several weeks or more) before rock or timber haul.
- Place a *geotextile fabric* over an inferior sub-grade before applying the surfacing material. This spreads vehicle load over the entire sub-grade and helps prevent the surfacing rock from sinking into the sub-grade soil.
- When crossing wetlands, follow the ordered list of choices for road location and construction in WAC 222-24-015(1). Recommendations on wetland restoration, enhancement or replacement are in Board Manual Section 9, Guidelines for Wetland Replacement by Substitution or Enhancement.

4.2 Compaction and Stabilization

(Rules are in WAC 222-24-030 and WAC 222-24-035.)

General Compaction BMPs

Compaction of the embankment, road sub-grade and landings ensures a solid earthen structure.

- Compacting the embankment reduces potential failure and surface erosion.
- Compacting the sub-grade extends the life of the running surface. It also reduces sediment runoff from the pumping of fine sediments upward into the road ballast and surfacing.
- Compacting the road surface and landings can shorten the settling time, extend rock surface life, and reduce sediment production during rainy weather.

For best compaction results:

- Place soil in 1 to 2 foot layers and run excavation equipment over the entire width of the lifts.
- Avoid incorporating organic material into any area to be compacted.
- Compact during optimal soil moisture conditions. Determine this through observation and experience with different soil types. In soils with silt or clay, ideal soil moisture content is when you can squeeze the soil into a cohesive ball without having water form on the outside.

Special Case BMPs

In some instances, apply these additional techniques to enhance the sub-grade and road surface:

- On heavily used roads or where rock is expensive, use a roller to compact the sub-grade and surfacing. This extends the life of the road by:
  - Reducing the water intrusion.
  - Reducing the wear.
  - Improving the sub-grade's durability.
  - Maintaining the crown.
  - Enhancing the surfacing.

For this technique:

- Place surfacing in layers before compacting.
- Compact in several passes depending on the layer thickness. When there is no visible deformation of the surface, compaction is complete.
- If the sub-grade or surface rock is dry, spray on water or use a roller with a built in spray bar.
- If using a vibratory roller:
  - Place surfacing in 4 to 6 inch layers before compacting.
  - Compact until a sheen of water and fines rise to the surface.
- Use hard, angular rock that has a full range of fragments to tightly pack the road surfacing.

Stabilization BMPs

Stabilize all disturbed soils that have a potential to deliver sediment to typed waters. Stabilization methods include establishing vegetation and covering exposed soils with *bio-matting*, straw, tree boughs, or hydro mulching.

Waste soil (spoil) deposit areas should be located where material will not enter any typed waters if erosion or failure occurs. An area with stable, shallow slope topography is best suited for a spoil area. Compaction of spoil deposit areas reduces potential embankment failures, surface erosion, and helps fit material into waste areas. Apply the compaction techniques to spoil deposit areas:

- For best results, handle spoils when they are dry. Handling super-saturated material may require sediment controls (e. g., *silt fence*, berms, straw).
- Seed or plant disturbed soils with non-invasive plant species (native plants are preferred). Consider adding fertilizer and/or mulch if the site has poor nutrient quality and/or organic content.

4.3 Erosion Control

Erosion control measures are necessary if exposed soils can deliver sediment to typed waters. The key to controlling sediment is to control erosion. The best way to control erosion is to prevent it by:

- Covering all exposed soils with non-invasive plant species as soon as possible (native plants are preferred). Until the area can be vegetated, apply straw, logging slash or *fiber mats* to the exposed soil to prevent erosion from raindrop splash. This not only protects and holds soil particles from the erosive effects of rainfall; it also prevents the spread of noxious weeds.
- Scheduling construction during dry soil conditions.

4.4 Sediment Control

The goal of sediment control is to create a stable, dispersed, non-erosive drainage pattern. This minimizes potential or actual sediment delivery to typed waters. Where needed, sediment control BMPs include:

- Excavating *dead sumps* to intercept and settle sediment-laden water.
- Building *sediment traps* in ditch lines to create small sediment settling pools. Make *sediment traps* from rock, *straw wattles*, or sand filled bags. Orient the traps so they dip in the center and curve slightly. This keeps the flow centered in the ditch.
- Installing *slash filter windrows* to intercept sediment at the toe of fills over water crossings.
- Installing a secondary ditch or a raised berm over water crossings.
- Placing *straw wattles*, *silt fencing*, or *slash filter windrows* perpendicular to the hill slope to slow down and disperse water flow.

Use *sediment traps*, *silt fences* or *dead sumps* only as temporary or remedial measures because they require continuous maintenance. Install temporary *sediment traps* in any of the following situations:

- If erosion or sediment is likely to deliver to typed waters.
- If roads are built of erosive, native soils.
- If cut and fill slopes are difficult to vegetate.

BMPs for roads within 200 feet of typed water

Apply one or more of the following techniques on roads built of erosive native soils, or are likely to have ditch erosion, or have cut or fill slopes that are difficult to vegetate:

- Grass seeding.
- Armoring ditches.
- Constructing catch basins.
- Constructing temporary *sediment traps*.
- Rocking road surfaces near water crossings.

In situations where sediment control devices need to be used long-term consider surfacing that requires little to no maintenance such as chip sealing or paving portions of roads.

4.5 Vegetation BMPs

Consult with the Natural Resource Conservation Service, a county extension office or a State resource agency (DNR, Ecology, Agriculture) to determine the type of seeds and/or plants to use. Factors to consider are:

- Type of soils and soil conditions, including moisture content and degree of compaction.
- Available seed/plant sources (native plants are preferred).
- Costs and methods of seeding or planting.
- Avoiding invasive plant species.
- Matching the time of year the site is accessible with the appropriate planting of seed and/or plants.
- Topographic aspect, north or south facing slopes.

When applying grass seed to exposed soils:

- Consider using *straw blankets* or loose straw if soil moisture is low. Apply straw 3-6 inches thick.
- Seed during times of year that will allow germination without additional site visits to apply water.

4.6 Grading

To protect the sub-grade, grade a road before the surface reaches severe stages of pothole formation, wash boarding, or it begins to pool water. Grade only as needed to maintain the surface drainage and keep the sub-grade from becoming saturated.

Grading BMPs

- Determine the cause of potholes and wash boarding and fix the problem. The problem is usually standing water.
  - Cut out potholes and wash boarding. Pull road surfacing back onto running surface. This reduces water penetration and sub-grade saturation. Long-term solutions include restoring the road crown, adding rock, adding culverts, and ditching to reduce water in the road prism.
- Remove berms except those needed to carry water away from unstable slopes and/or typed waters.
- Compacting the graded surface with a roller will:
  - Seal the surface and retain fines.
  - Reduce potholes.
  - Reduce wash boarding.

Avoid the following practices:

- Unnecessary removal of all vegetation in functioning ditches.
- Undercutting the fill or cut slopes.
- Pushing sediment over steep slopes above typed waters.
- Burying vegetation, logging debris and slash into the road running surface or sub-grade. (Decomposition of this material will leave holes in the road surface. Traffic on this surface may cause sediment delivery to typed waters.)

4.7 Roadside Vegetation Maintenance

The purpose of roadside vegetation maintenance is to increase visibility, improve safety, control noxious weeds, and to keep roots from interfering with the roadbed and ditches. Methods include chemical application, hand brushing, and mechanical brushing.

Roadside chemical application BMPs

- Find and mark the location of all surface waters and wetland management zones immediately before applying roadside spray.
- Mix chemicals in upland areas away from all typed waters and Type A and B Wetlands.
- Prevent chemicals from entering any surface waters and Type A and B Wetlands and their buffers.
- Follow all label instructions.
  - Know and follow regulations regarding chemical storage, handling, application, and disposal.

- Develop a contingency plan for spills, including clean-up procedures and proper notification. Keep this plan on site during operations.
- Apply chemicals during optimum weather conditions and optimum times for control of target vegetation. See Board Manual Section 12, Guidance for Application of Forest Chemicals.

Mechanical Brushing BMPs

- Remove brush to a width that allows proper maintenance functions such as grading, trimming shoulders, pulling ditches, and cleaning headwalls.
- Upon completion, remove all debris and/or slash generated during mechanical brushing that will interfere with proper function of ditches or culverts.

PART 5. LANDINGS

WAC 222-24-035(1) states, "Locate landings to prevent potential or actual damage to public resources. Avoid excessive excavation and filling. Landings shall not be located within natural drainage channels, channel migration zones, RMZ core and inner zones, Type Np RMZs, sensitive sites, equipment limitation zones, and Type A or B Wetlands or their wetland management zones."

Landings can deliver sediment through runoff or mass failures (landslides). Reduce costs and risks to public resources by minimizing the number of landings on steep erosive slopes or large fills.

Utilize the road BMPs in Part 3 Road Location and Design and Part 4 Road Construction and Maintenance when locating, designing, and constructing landings.

General landing BMPs

- Use existing landings if properly located.
- Design landings to provide for drainage:
  - Slope landings 2-5%.
  - Install cross drains, ditch-outs, or other drainage structures to route runoff onto the forest floor away from typed waters. See Part ~~7~~6 Drainage Structures.
  - Compact if appropriate. See 4.2 Compaction and Stabilization.
- Construct when moisture and soil conditions are not likely to result in excessive erosion and/or soil movement.
- After completion of harvest:
  - Pull back fill material and woody debris on steep slopes that have the potential to damage a public resource. Place debris in a stable location.
  - Install self-maintaining drainage structures. See Part ~~7~~6 Drainage Structures.

~~PART 6. WATER CROSSINGS~~

~~(Rules are in WAC 222-24-040.)~~

~~Water crossing structures are culverts, bridges, and fords. All of these structures can contribute sediment and negatively affect water quality and fish habitat. Installing or replacing water crossings usually requires a completed Forest Practices Application/ Notification (FPA/N) and~~

~~may require a Hydraulic Project Approval (HPA) from Washington Department of Fish and Wildlife (WDFW).~~

~~6.1 General Water Crossing BMPs~~

~~Minimizing the number of water crossings in the following locations will reduce road costs and risks to water quality and other public resources:~~

- ~~In areas requiring steep road approaches.~~
- ~~Across braided stream channels.~~
- ~~On flat stream gradients immediately downstream of steep stream gradients. (These areas are susceptible to high sediment deposition.)~~
- ~~In areas requiring deep fills.~~
- ~~Immediately downstream of unstable slopes or landforms (see Board Manual Section 16, Guidelines for Evaluating Potentially Unstable Slopes and Landforms).~~

~~Figure 3.2 provides guidance for culvert design and installation that will reduce potential catastrophic failures due to debris (wood and sediment) blockages.~~

~~Have a headwater depth to culvert diameter (HW/D) ratio of 0.9 or less when using native soils for the fill.~~

~~Match the culvert width to the natural channel to reduce ponding. Do not widen the channel at the inlet. This will help keep woody debris oriented to pass through culvert.~~

~~Match the culvert to the channel slope and elevation. This avoids pooling of the stream above the culvert.~~

~~Align culvert with the stream channel.~~

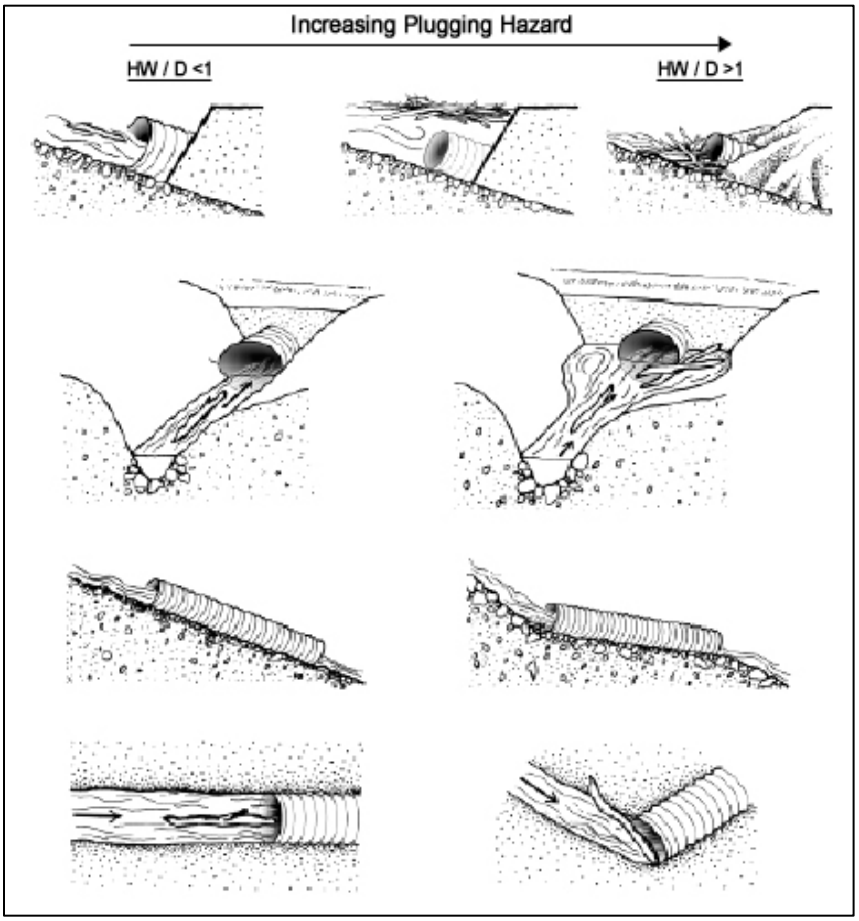

~~*Figure 3.2 Culvert plugging hazard*~~

~~Deeper fills and/or streams with greater debris transport potential BMPs~~

~~Steeper gradient streams often require deeper fills over the crossing structure and have increased amounts of woody debris. In areas where water can come over the road, select the BMPs or other measures from the following list that best fit the local conditions:~~

- ~~Construct a dip on the fill over the stream crossing structure. This reduces fill erosion potential and improves resistance to road failures resulting from high water flows and debris. Use coarse material, compact the fill and armor with large rock.~~
- ~~Dip the road grade and armor the fill to direct water onto stable, vegetated ground within the natural drainage (Figure 3.3).~~
- ~~Outslope the road at the crossing.~~
- ~~Construct an armored spillway at the intersection of the stream's gorge wall and the water-crossing fill.~~
- ~~Place large riprap on the upstream facing fill and at the dip on the downstream facing fill.~~
- ~~Install oversized inlets (bell-shaped inlet structures) or *miter* the culvert inlet to improve flow characteristics and to help orient debris.~~

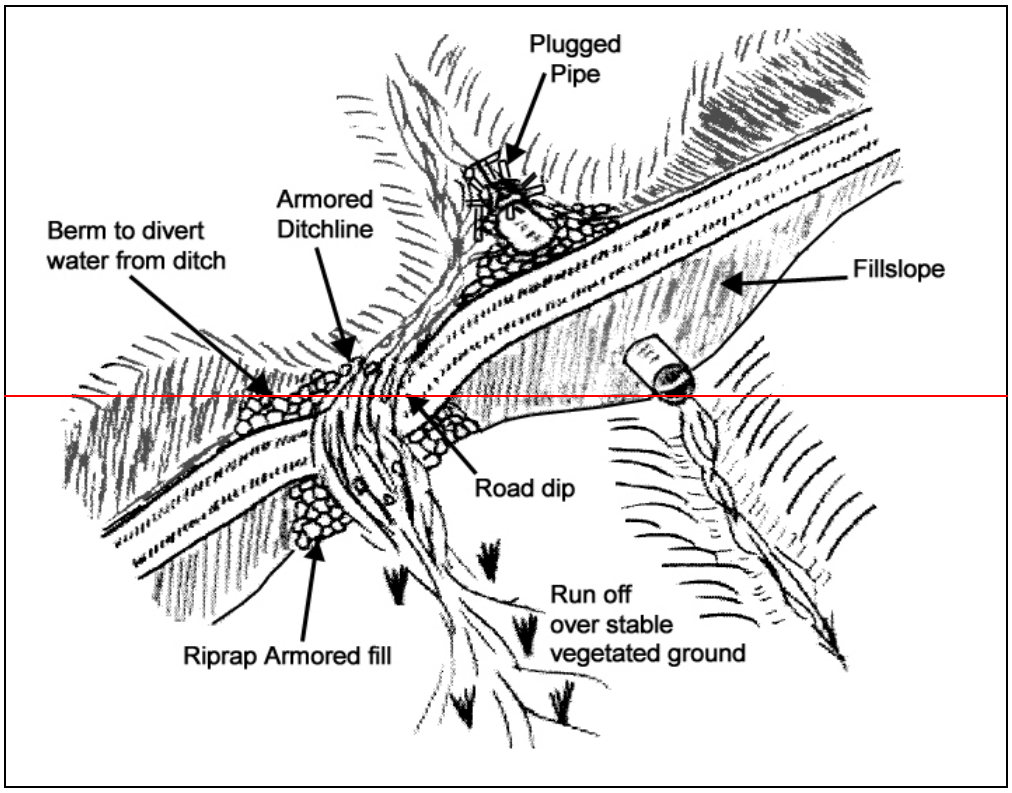

~~*Figure 3.3 Armored relief dip design*~~

~~Consider increasing the size of crossing structures when:~~

- ~~The crossing is in the rain-on-snow zone.~~
- ~~The stream contains large amounts of mobile debris (wood, gravel).~~
- ~~The crossing is inaccessible during winter.~~
- ~~The crossing requires deep fills.~~
- ~~Crossing a flat, broad area with poorly defined channels.~~
- ~~You are considering installing a new culvert with a diameter equal to or less than ¾ of the active channel width.~~

~~Water crossing construction BMPs~~

- ~~Cover tops of culverts with at least 12 inches of fill, or to a depth of ½ the culvert diameter, whichever is greater. This minimizes damage to culverts during road maintenance. It also distributes the weight of passing vehicles, preventing culverts from crushing.~~
- ~~Prevent stream flow erosion by sizing culverts adequately. Placement of riprap around the inlet and/or outlet of a culvert may also prevent erosion.~~
- ~~For natural surface roads, apply surface rock at culvert approaches.~~
- ~~In areas where beavers are present, consult WDFW.~~
- ~~Place slash and/or debris above the 100-year flood level outside of the riparian management zone or wetland management zone in a stable location.~~

~~Water crossing maintenance BMPs~~

~~Inspect all water crossing structures regularly and after storm events to ensure proper function. The following may indicate the need for maintenance or replacement:~~

- ~~Stream flows regularly over the road.~~
- ~~Stream flows diverted from the culvert inlet into the ditch. Look for severe erosion in the ditch located downhill from the crossing.~~
- ~~Stream flows diverted from the culvert inlet into another stream channel (basin).~~
- ~~Streambed material accumulations at the culvert inlet.~~
- ~~Down-cut channel bottoms and eroded stream banks immediately downstream of the culvert (outlet scour/drop).~~
- ~~Erosion of the fill located above the culvert inlet.~~
- ~~Crushed or dented culvert inlets.~~

~~6.2 Water Crossing Structures in Type S and Type F Waters~~

~~The installation of water crossing structures in Type S and F Waters is regulated by DNR through the FPA/N and WDFW through the Hydraulic Project Approval (HPA). You can apply for both permits with the FPA/N. Water crossing structures in fish waters should allow for fish passage. Fish includes all life stages of resident and anadromous fish. Before designing water crossings, verify the water type with DNR. Information on crossing structures (Design of Road Culverts for Fish Passage) is located at . Information on HPAs and design criteria is at http://wdfw.wa.gov/hab/hpapage.htm.~~

~~***NOTE:*** Small forest landowners may be eligible for a state cost share program to help pay for fixing *fish passage barriers*. See 2.3 Family Forest Fish Passage Program. Visit this website: www.dnr.wa.gov/sflo/fffpp or contact any DNR region office for more information.~~

~~6.3 Water Crossing Structures in Type N Waters~~

~~(Rules are in WAC 222-24-040.)~~

~~The first step in designing a Type N Water crossing structure is to verify the water type with the DNR. Then design your water crossing structure. Crossings need to be large enough to accommodate the 100-year flood with consideration for the passage of debris.~~

~~This section includes three methods to determine culvert sizing, any one of which can be used. See Table 3.2.~~

~~**Method A (Sizing Table Method)** uses field-verified bankfull width and average bankfull depth and Table 3.3 to determine the diameter of the culvert. You may need additional size to accommodate debris if the culvert diameter size is less than ¾ the active channel width.~~

~~**Method B (Bankfull Width Method)** uses field-verified bankfull width at the stream crossing to determine the diameter of the culvert.~~

~~**Method C (Hydraulic Design Method)** is a hydraulic-based crossing design method that uses estimated stream flows. The size of the culvert is based on local 100-year flood flow calculations and the nomograph in Figure 3.4. Use local knowledge to predict additional culvert sizing to consider the passage of woody debris.~~

~~**Table 3.2 Three methods to size Type N Water culverts**~~

	~~**Method A Sizing Table**~~	~~**Method B Bankfull Width**~~	~~**Method C Hydraulic Design**~~
~~**Summary**~~	~~Enter bankfull width and average bankfull depth into the culvert sizing table (Table 3.3).~~	~~Choose culvert diameter equal to or greater than bankfull width.~~	~~Calculate 100-year flow, determine culvert size using nomograph (Figure 3.4), and account for debris.~~
~~**Complexity**~~	~~Medium/Low~~	~~Low~~	~~High~~
~~**Data Required**~~	~~Measured bankfull width and average bankfull depth.~~	~~Measured bankfull width only.~~	~~100-yr flow (various methods and data requirements).~~
~~**Analysis Required**~~	~~Table 3.3~~	~~None~~	~~Peak flow calculation, use of nomograph (Figure 3.4).~~
~~**Does Method provide for passage of debris?**~~	~~Somewhat, except where culvert size is much smaller than bankfull width.~~	~~Yes~~	~~No – needs additional consideration.~~
~~**Where to use**~~	~~Where bankfull width and depth is easily determined.~~ ~~Where basin area and/or hydrology are uncertain.~~	~~When simplicity is required.~~ ~~Where bankfull width is clear, but depth uncertain.~~ ~~Where abundant mobile debris is present at the site.~~	~~Where hydraulic expertise is available.~~ ~~Where site specific design and/or a non-round culvert are desired.~~ ~~Where bankfull width and depth is difficult to determine.~~

~~Table 3.3 Method A, culvert sizing table for Type N Waters~~

~~Bankfull width (BFW) in Feet~~	~~Average Bankfull Depth in Inches~~											
	~~3~~	~~6~~	~~9~~	~~12~~	~~15~~	~~18~~	~~21~~	~~24~~	~~27~~	~~30~~	~~33~~	~~36~~
~~1~~	~~*15~~	~~*18~~	~~24~~	~~30~~	~~--~~	~~--~~	~~--~~	~~--~~	~~--~~	~~--~~	~~--~~	
~~2~~	~~24~~	~~30~~	~~30~~	~~36~~	~~42~~	~~42~~	~~48~~	~~48~~	~~--~~	~~--~~	~~--~~	~~B~~
~~3~~	~~30~~	~~36~~	~~42~~	~~48~~	~~48~~	~~48~~	~~54~~	~~54~~	~~54~~	~~60~~	~~60~~	~~60~~
~~4~~	~~30~~	~~42~~	~~48~~	~~54~~	~~54~~	~~54~~	~~60~~	~~60~~	~~66~~	~~66~~	~~72~~	~~72~~
~~5~~	~~36~~	~~48~~	~~54~~	~~54~~	~~60~~	~~60~~	~~66~~	~~66~~	~~72~~	~~72~~	~~78~~	~~78~~
~~6~~	~~36~~	~~48~~	~~54~~	~~60~~	~~66~~	~~66~~	~~72~~	~~72~~	~~78~~	~~78~~	~~84~~	~~84~~
~~7~~	~~42~~	~~54~~	~~60~~	~~66~~	~~72~~	~~72~~	~~78~~	~~78~~	~~84~~	~~84~~	~~90~~	~~90~~
~~8~~	~~42~~	~~60~~	~~66~~	~~72~~	~~78~~	~~78~~	~~84~~	~~84~~	~~84~~	~~90~~	~~90~~	~~90~~
~~9~~	~~48~~	~~60~~	~~66~~	~~78~~	~~78~~	~~84~~	~~84~~	~~90~~	~~90~~	~~90~~	~~96~~	~~96~~
~~10~~	~~54~~	~~66~~	~~72~~	~~78~~	~~84~~	~~84~~	~~90~~	~~90~~	~~96~~	~~96~~	~~96~~	~~--~~
~~11~~	~~60~~	~~66~~	~~72~~	~~84~~	~~84~~	~~90~~	~~90~~	~~96~~	~~96~~	~~--~~	~~--~~	~~--~~
~~12~~	~~66~~	~~72~~	~~78~~	~~84~~	~~90~~	~~90~~	~~96~~	~~96~~	~~--~~	~~--~~	~~--~~	~~--~~
~~13~~	~~66~~	~~78~~	~~78~~	~~90~~	~~90~~	~~96~~	~~--~~	~~--~~	~~--~~	~~--~~	~~--~~	~~--~~
~~14~~	~~72~~	~~78~~	~~84~~	~~90~~	~~96~~	~~96~~	~~--~~	~~--~~	~~--~~	~~--~~	~~--~~	~~--~~
~~15~~	~~78~~	~~84~~	~~90~~	~~96~~	~~96~~	~~--~~	~~--~~	~~--~~	~~--~~	~~--~~	~~--~~	~~--~~
~~16~~	~~78~~	~~84~~	~~90~~	~~96~~	~~--~~	~~--~~	~~--~~	~~--~~	~~--~~	~~--~~	~~--~~	~~--~~
~~17~~	~~84~~	~~90~~	~~96~~	~~--~~	~~--~~	~~--~~	~~--~~	~~--~~	~~--~~	~~--~~	~~--~~	~~--~~
~~18~~	~~84~~	~~90~~	~~96~~	~~--~~	~~--~~	~~--~~	~~--~~	~~--~~	~~--~~	~~--~~	~~--~~	~~--~~
~~19~~	~~90~~	~~96~~	~~--~~	~~--~~	~~--~~	~~--~~	~~--~~	~~--~~	~~--~~	~~--~~	~~--~~	~~--~~
~~20~~	~~96~~	~~96~~	~~--~~	~~--~~	~~--~~	~~--~~	~~--~~	~~--~~	~~--~~	~~--~~	~~--~~	~~--~~

~~* See WAC 222-24-040(3) for details relating to size restrictions when installing culverts.~~

~~Method A (Sizing Table Method)~~

~~Step 1: Verify the stream is Type N Water and then determine the bankfull width and average bankfull depth using methods shown in Board Manual Section 2, Standard Methods for Identifying Bankfull Channel Features and Channel Migration Zones.~~

~~Step 2: See the culvert sizing table (Table 3.3) to determine the diameter of the culvert. Consult with DNR for culvert diameters larger than 96 inches. For culvert sizes in the shaded areas of chart, it is recommended to use bridges, pipe arches, or open bottom culverts.~~

~~Method B (Bankfull Width Method)~~

~~Step 1: Verify the stream is a Type N Water. Measure the bankfull width in the field using the methods shown in Board Manual Section 2, Standard Methods for Identifying Bankfull Channel Features and Channel Migration Zones.~~

~~Step 2: Size the culvert diameter no smaller than bankfull width. *Note: This method may not be possible in areas that are difficult to accurately measure bankfull width.*~~

~~Method C (Hydraulic Design Method)~~
~~Method C is a hydraulic-based crossing design method that uses an estimate of stream flow for a 100-year flood to size culverts based on a nomograph. Figure 3.4 is a nomograph for calculating sizes for round corrugated metal culvert pipes on Type N Waters.~~

~~Limitations to the use of Method C:~~

- ~~Hydraulic design method assumes there is culvert inlet control. This is a condition where the hydraulic capacity of the culvert is limited by the inlet configuration. This generally occurs in culverts steeper than 2% with unrestricted outflow.~~
- ~~Flow measurements of past 100-year flood events may be unavailable.~~
- ~~Estimated 100-year flow volumes may be hard to predict because of rain-on-snow events and inaccurate calculations of basin size.~~

~~Step 1: Verify the stream is Type N Water. Then determine the flow volume of the 100-year flood event (q value on the nomograph in Figure 3.4) by:~~

- ~~Using stream flow records from gauged streams.~~
- ~~Estimating the 100-year flood event. Table 3.4 lists three methods to estimate stream flows for 100-year flood events.~~

~~Step 2: Use the nomograph in Figure 3.4 to determine the culvert diameter:~~

- ~~Select culvert entrance type (armored headwall, mitered to slope, projecting).~~
- ~~Select maximum headwater to culvert diameter ratio (HW/D). Do not exceed 0.9 when using native soils for the fill. This will ensure performance without reliance on hydraulic pressure to pass storm events.~~
- ~~Project a line from the Entrance type bar through the Water Discharge bar (q) to arrive at a point on the Culvert Diameter bar (D).~~
- ~~Round up to the nearest culvert diameter listed.~~
- ~~Consider adding additional size to the culvert if debris is present in the stream.~~

~~Table 3.4 Three methods to estimate the 100-year flood event.~~

~~METHOD~~	~~COMMENTS~~
~~Regression Equations Method~~ ~~Follow instructions at http://wa.water.usgs.gov/pubs/wrir/flood_freq/~~ ~~Further information may be found at http://water.usgs.gov/osw/streamstats~~	~~Easy to use web-based method.~~ ~~Uses a prediction equation with a standard error of 37% to 77%.~~ ~~Best used for basins greater than 50 acres.~~ ~~Developed using lower elevation stream flow gauge stations that measured larger basin areas typical in forest culvert design.~~
~~Flow Transference Method~~ ~~Follow instructions at http://wa.water.usgs.gov/pubs/wrir/flood_freq/~~	~~Useful method when water-crossing structure is in or near a gauged basin.~~ ~~Transfers in-stream gauge station information to an un-gauged drainage area.~~
~~Rational Method~~ ~~Follow instructions at http://www.wsdot.wa.gov/eesc/design/hydraulics/downloads.htm~~	~~Uses rainfall intensity maps or equations to calculate flow. (These maps may be difficult to obtain for forested basins.)~~ ~~Maps do not show flow from rain-on-snow events.~~ **~~Do not use on drainage basins larger than 200 acres.~~**

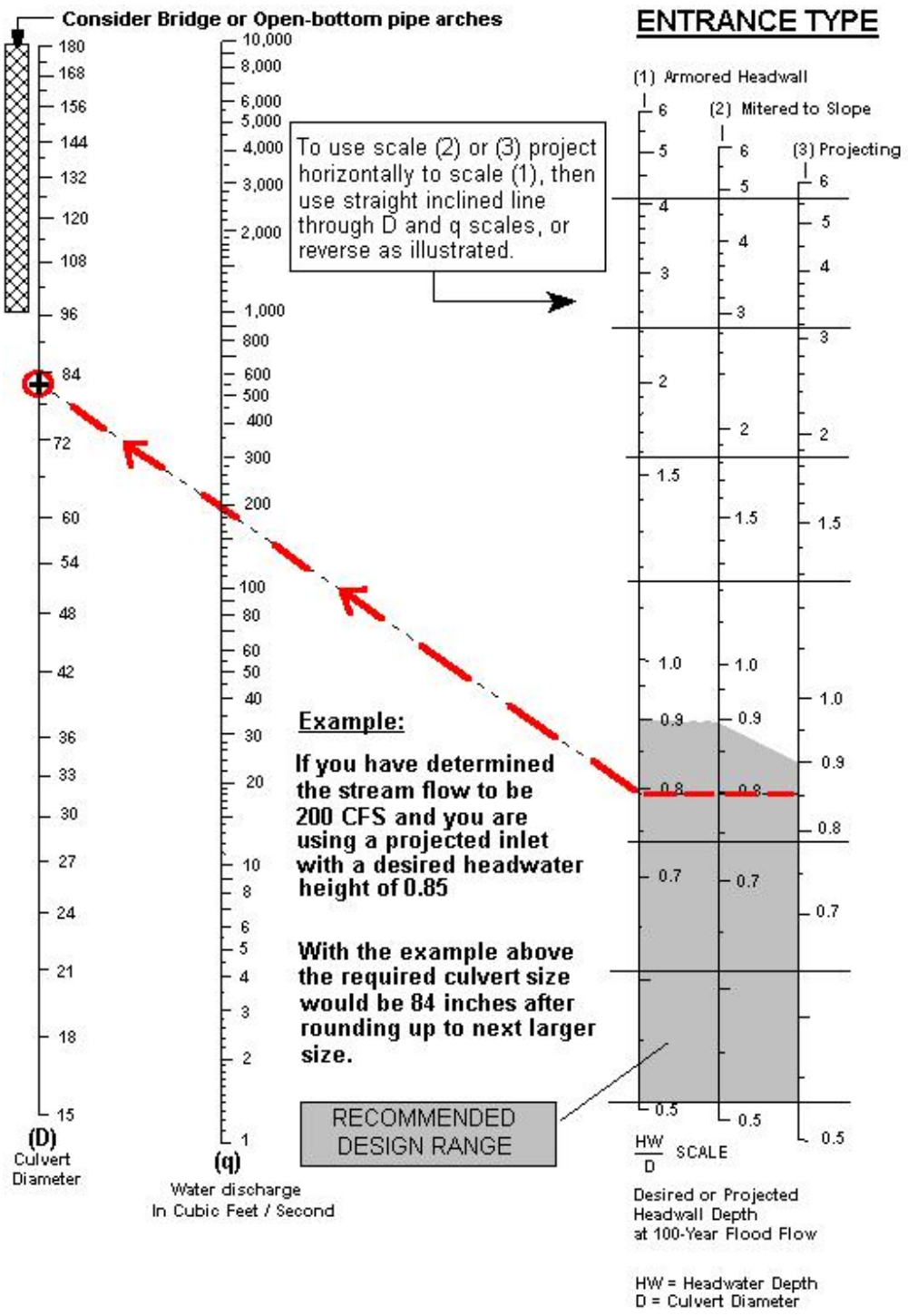

~~*Figure 3.4 Nomograph for calculating sizes for round corrugated metal culvert pipe on* ***Type N Waters.***~~

~~6.4 Fords~~

~~You may use properly constructed and maintained fords in Type Np and Ns Waters. See WAC 222-24-040(5).~~

~~Fords are a type of water crossing where vehicles drive directly through streams (Figure 3.5). They have a high potential to generate and deliver sediment. Therefore, they are only appropriate to use during periods of no or low stream flow. If flow conditions change, a ford crossing may no longer be appropriate.~~

~~*Figure 3.5 Ford water crossing*~~

~~Fords may be suitable in the following circumstances:~~

- ~~Minimal vehicle traffic.~~
- ~~In sites where access limits regular maintenance.~~
- ~~Variable stream widths exist from frequent landslides, debris flows, or ice flows originating upstream.~~
- ~~When culverts or bridges are not an option because:~~
  - ~~Crossing is too difficult to maintain.~~
  - ~~High debris loading is present in stream channel.~~

~~Construction BMPs~~

- ~~Fit the ford to the conditions on site (e.g., stream substrate and stream bank stability, stream width, depth and flow volume, lateral and vertical channel stability, flood frequency, debris loading).~~
- ~~If streambed does not have a firm rock or gravel base, install stabilizing material. Use reinforced concrete planks, crushed rock, riprap or rubber mats.~~
- ~~Make sure equipment is in good working condition and doesn't leak oil.~~
- ~~Install ditch-outs or water bars on each side of the approaches to divert water away from the stream.~~
- ~~Control erosion and sediment. See 4.3 Erosion Control.~~
- ~~Construct the ford so that you can maintain it.~~
- ~~Construct temporary fords to facilitate abandonment and site rehabilitation.~~

~~Maintenance BMPs~~
~~Streambeds are part of a dynamic system where storm events frequently change the streambed and stream banks. Fords should not require maintenance after every such event. If frequent or extensive maintenance is required, re-evaluate the use of the ford.~~

~~Maintain fords to:~~
- ~~Keep road approach ditch-outs and water bars functioning.~~
- ~~Control stream bank erosion. See 4.3 Erosion Control.~~
- ~~Eliminate multiple approaches.~~

PART ~~7~~6. DRAINAGE STRUCTURES

Landowners should take into account the need to reduce cumulative watershed effects from road sediment delivery to public resources. More intensive road work is needed in areas with closely spaced stream crossings and stream adjacent parallel roads. In these settings, not only are the potential impacts from road greater, but it may be difficult to find locations to direct sediment laden road run-off onto the forest floor. Where it is difficult to accomplish this there is greater value in applying BMPs that reduce sediment generation (e.g. improved surfacing) and ditch transport (e.g. silt traps). Drainage structures include relief culverts, dips, water bars, diversions, ditch-outs, and ditches. Drainage structures divert water and sediment from the road to the forest floor. They also disconnect road drainage from typed waters or Type A and B Wetlands. The frequency of drainage structures depends on several factors, such as:

- Road grade.
- Surface material.
- Elevation.
- Expected rainfall.
- Soil type.
- Road shape (inslope, outslope, crowned).
- Topographic opportunities for road drainage.
- Location of existing and/or planned drainage structures.
- Opportunity created by the road configuration.
- Local experience.

Install drainage structures in the following locations and order of priority:

1. As close to the stream as possible, to accomplish the following:
   - Limit the distance between the last drainage structure and water crossing structure.
   - Drain away from unstable hill slopes and/or erodible soils.
   - Allow outflow to disperse and filter sediment away from the stream.
2. In natural drainage areas of seeps and springs. If unable to install a drainage structure in the natural drainage area, divert and transport seep or spring water in a ditch for less than 100 feet to the nearest drainage structure.
3. To prevent diverting water from one basin to another.
4. At the low point on the road profile (including the sag point of vertical curves).

You may need to install additional drainage structures or improve road surface where:

- Ditch water delivers sediment to typed waters.
- The road is a stream adjacent parallel road.

- The density of stream crossings is high, resulting in most of the ditch length draining to streams.
- Ditch scour, road surface erosion, or outlet erosion is occurring from high ditch flow.
- Ditch flow exceeds the capacity of the culvert.

Table 3.~~5~~2 compares the construction costs, maintenance needs, and appropriate uses of relief culverts, dips, and water bars.

Table 3.~~5~~2 Comparison of Drainage Structures

	Relief Culverts	**Dips**	**Water bar**
Construction costs	Highest	Medium	Lowest
Maintenance	Medium Needs frequent inspection and cleaning.	Lowest Needs occasional repair or reshaping.	Highest Needs frequent cleaning, reshaping and replacement.
When to use	On steep road grades. On high traffic roads. At the low point of the sag of vertical curves or dips.	On low traffic roads. On outsloped roads. To back up culverts. On dry sites and native surfaced roads.	On low traffic roads. On abandoned roads. To back up culverts. To winterize high traffic roads.
When not to use	On difficult to maintain roads. On seasonal roads. Below unstable or raveling cut slopes.	On steep grades (>12 %). On curves. On high traffic roads.	On high traffic roads.

~~7~~6.1 Relief Culverts

Relief culverts divert road and ditch water onto the forest floor. Improper location of relief culverts may result in significant road-related resource damage. Overloading a site with drainage water can result in soil saturation and may cause overland flow, gullying and slope instability.

For guidance on planning and designing forest practices hydraulic projects, see Board Manual Section 5, Guidelines for Forest Practices Hydraulic Projects.

Installation BMPs

- Where practical, place the culvert on the natural slope of the land with the low end of the culvert at least 2 inches lower than the upper end. When impractical, keep the culvert grade at least 2% higher than the ditch grade.
- Skew the culvert so it directs water 30 to 45 degrees from perpendicular to road centerline.
- No skew is necessary on roads less than 3% grade or at a low point on the road profile.

- Anchor the culvert by packing fill material around it.
- Cover tops of culverts with 12 inches of fill or ½ the culvert's diameter whichever is greater. (This minimizes damage from vehicles by preventing the culvert from crushing.)
- Install energy dissipaters such as flumes and down spouts on slopes greater than 60% or where the outfall drains onto fill or other erosive material.

Maintenance BMPs

- Inspect and clean culverts routinely and after storm events.
- Check need for additional cross drains for springs, seeps, low spots in ditch lines, and areas where ditch line erosion is occurring.
- Mark hidden relief culverts with posts so heavy equipment operators can see and protect them.
- Remove brush from around inlets and outlets to see problems and reduce the risk of blockage.

~~7~~6.2 Dips

Dips are long, shallow road surface drainage structures that provide cross drainage on insloped road sections (Figure 3.~~6~~2).

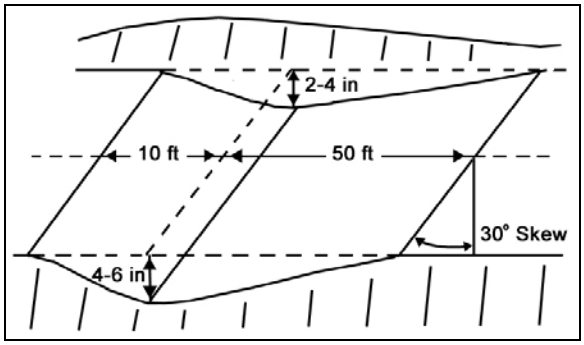

Figure 3.~~6~~2 Diagram of a rolling dip

Road grades from 12% to 15% are the upper limits for dips because:

- If the dip becomes lower than the outfall it will not drain properly, impeding traffic and causing ruts and sedimentation.
- Truck frames can twist during passage over dips on steeper slopes.

Construct dips:

- To provide access for road maintenance and land management activities. When the dip is:
  - Short in length and traffic includes trucks with long frames, orient the dip perpendicular to the direction of traffic.
  - On steep road grades, skew the dip 30 degrees from perpendicular to provide drainage.
- With rock armoring on erosive native surface roads.
- With grass-seeded outflows when near typed waters.

~~7~~6.3 Water Bars

Water bars divert surface water directly across the road and fill slopes to the forest floor (Figure 3.~~7~~3).

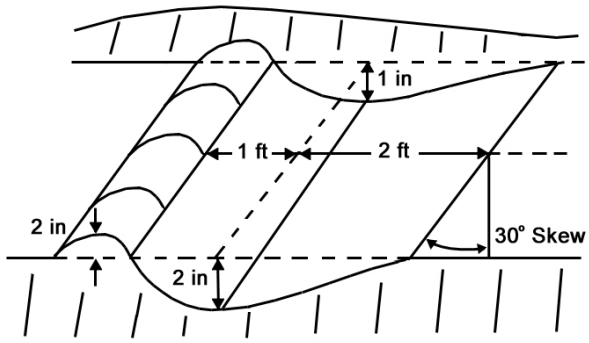

Figure 3.~~7~~3 Diagram of a water bar

General water bar BMPs

- Install water bars at a gradient steep enough to provide self-cleaning drainage with minimal maintenance:
  - For roads greater than 3% grade, skew at least 30 degrees from perpendicular to the centerline.
  - For roads less than 3% grade or at the bottom of a dip, install them perpendicular to the centerline.
- Locate outflows on stable areas.
- Construct water bars into the cut slope to block the ditch. These act as “safety valves" for failed relief culverts. They work best as temporary measures on low traffic roads with an inadequate number of relief culverts.
- Armor water bars at potential scour points (outflows, trench bottoms) with rock or other energy dissipaters.
- Construct temporary water bars for over-wintering by dumping piles of surfacing rock on the road. Later, grade them out for surfacing material.

~~7~~6.4 Drainage Diversions

In rare circumstances (e.g., approaches to streams with wet weather haul), install diversion structures to drain the surface of the roadway (Figure 3.~~8~~4). These work best on low traffic roads and include:

- I-beams set in the road surface with edges on grade and at a 30 degree skew to the road centerline. The I-beam acts as a gutter to collect surface runoff and carry it away from the road surface.
- Rubber strips installed in the road surface at a 30 degree skew to the road centerline (Figure 3.~~8~~4). Mount the strips on buried wood or steel beams making sure that they stick above the road surface. Studies identified the following limitations to these surface water deflectors:
  - PVC belting tends not to rebound well under traffic and bends over parallel to the road grade. Rubber-laminated belting has less of this problem.
  - Road grading can rip these diversion structures out.
  - Heavy winter hauling causes the top of some belting to fray and delaminate.
  - On road grades less than 6%, potholes formed in the wheel ruts on the uphill side of the rubber strip.

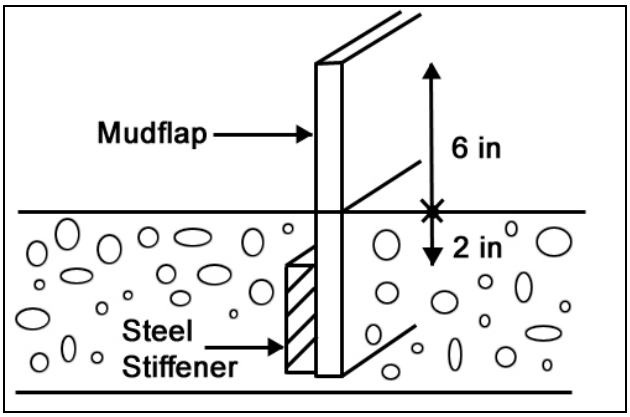

Figure 3.~~8~~4 Diagram of rubber strip diversion structure

~~7~~6.5 Ditches

Ditches carry road runoff water to drainage structures.

Installation BMPs

- Typically, ditches should be at least one foot deeper than the road prism and have an approximate 2:1 slope on either side.
- If the ditch has the potential to drain a wetland, refer to WAC 222-24-015.

Maintenance BMPs

- Maintain ditch vegetation within 100 feet of water crossings. Vegetation filters sediment from ditch flow.
- Pull ditches only when necessary to maintain drainage. This helps maintain ditch function during a major storm event.
- Clean ditches of all debris generated during logging. Place this material on the downhill side of the road near the base of the fill.
- Do not undercut the road cut slope.
- Match equipment with the type of maintenance work required. Excessive excavation will create potential sediment delivery.
- Remove slides from the ditches and roadway. See 4.2 Compaction and Stabilization.

~~7~~6.6 Energy Dissipaters

The location and design of energy dissipaters is critical to prevent concentrated water runoff flows and gully formation on fill slopes or the forest floor. Install energy dissipaters on:

- Slopes greater than 60%.
- Erosive soils.
- Drainage structure outfalls.

Energy dissipaters include:

- Flumes or downspouts (half culverts staked into place).
- Large rock placed below outfall.
- Large woody material placed below outfall.

PART ~~8~~7. ROAD ABANDONMENT

(Rules are in WAC 222-24-052(3).)

An approved FPA for a forest practices hydraulic project (FPHP) may be required when abandoning roads within S, F or N Waters. For guidance when abandoning roads, see Board Manual Section 5, Guidelines for Forest Practices Hydraulic Projects.

The goal of road abandonment is to re-establish the natural drainage and to leave the *road prism* in a condition that will not damage public resources or pose a risk to public safety. Abandoned roads do not require maintenance. See 4.3 Erosion Control.

~~8~~7.1 Prioritizing Roads for Abandonment

Consider abandonment of chronic problem roads that require frequent maintenance to protect public resources, such as:

- Stream adjacent parallel roads.
- Roads within a riparian management zone.
- Areas with uncontrollable erosion and/or sediment delivery to typed waters.
- Water crossing failures.
- Cut and fill slope failures.

~~8~~7.2 Side Cast and Fill Removal BMPs

Remove side cast and fills if failures have the potential to damage a public resource or pose a risk to public safety. Areas to look for include:

- Cracks and slumps in the road surface or shoulder.
- On unstable slopes or landforms (see Board Manual Section 16, Guidelines for Evaluating Potentially Unstable Slopes and Landforms). The material should be end hauled to a stable location.
- Where the weight and volume of side cast material could cause a slide.

Removal methods:

- Place all excavated material against the cut slope or other stable location. Do not place in areas on the road surface that will allow water to pond.
- On steep slopes in high rainfall areas, do not place excavated material on the road surface. This material will become saturated and unstable.

~~8~~7.3 Water Crossing Removal BMPs

Removing water crossing structures restores the natural drainage of streams. When removing water crossing structures:

- ~~A completed FPA/N from DNR may be required. An HPA from WDFW may be required.~~
- Re-establish the natural streambed as close to the original location as possible and so it matches the up and downstream width and gradient characteristics.
- Place all excavated material in stable locations.
- Leave stream channels and side slopes at a stable angle.

~~8~~7.4 Drainage BMPs

Install self-maintaining drainage structures that will not require future maintenance. Provide for drainage by:

- Removing relief culverts. Make sure side slopes are left at a stable angle.
- Removing berms or punching holes in them so they drain to a stable location.
- Ripping the road surface to promote re-vegetation.
- Installing non-drivable water bars:
  - To intercept the ditch. Make sure to key the water bar into the road cut-slope.
  - To direct outflow onto stable locations.
  - That are appropriately skewed:
    - For roads greater than 3% grade, skew at least 30 degrees from perpendicular to the centerline.
    - For roads less than 3% grade or at the bottom of a dip, install them perpendicular to the centerline.
  - At a spacing to disperse runoff and minimize erosion and sedimentation.
  - At natural drainage points.

PART ~~9~~8. ROCK PITS AND QUARRIES

(Rules are in WAC 222-24-060.)

General maintenance and operation BMPs

- Excavate and maintain sediment retention ponds when needed.
- Protect all typed waters from sediment delivery due to erosion. See 4.3 Erosion Control.
- Know and comply with regulations regarding storage, handling, application, and disposal of all chemicals and fuels. Follow all label instructions.
- Develop a contingency plan for spills, including clean-up procedures and proper notification. Keep this plan on site while operating.
- Store fuel and other chemicals in a bermed area to minimize potential delivery to surface waters or wetland management zones.

GLOSSARY

Bio-matting is a biodegradable woven mat that comes in various lengths. It is rolled in place and then staked to help stabilize slopes. Includes **fiber mats**.

Fish passage barriers are any artificial in-stream structures that impede the free passage of fish.

Forest practices hydraulic project (FPHP) means a forest practices activity that includes the construction of performance of work that will use, divert, obstruct or change the natural flow or bed of any Type S, F or N Waters.

Full bench road construction is a road constructed on a side hill without using the material removed from the hillside as a part of the road (Figure 3.~~9~~5). This is common on steep and/or unstable ground. Two methods to remove spoil material (excess material cut from the hillside) are:

- "End hauling", where the spoil material is hauled to a suitable waste area.
- "Overhaul", where the spoil material is pushed to a suitable waste area.

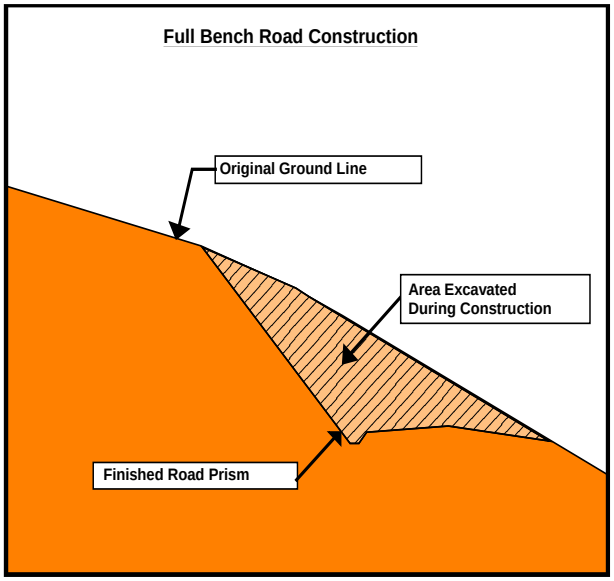

Figure 3.~~9~~5 Diagram demonstrating full bench construction.

Geotextile is a fabric mat that allows water to drain through it while supporting the materials located above it.

Mitered culverts are culverts that have had the inlet or outlet cut to fit the angle of the fill slope.

Road Prism is the area of the ground containing the road surface, cut slope, and fill slope. See Figure 3.~~10~~6.

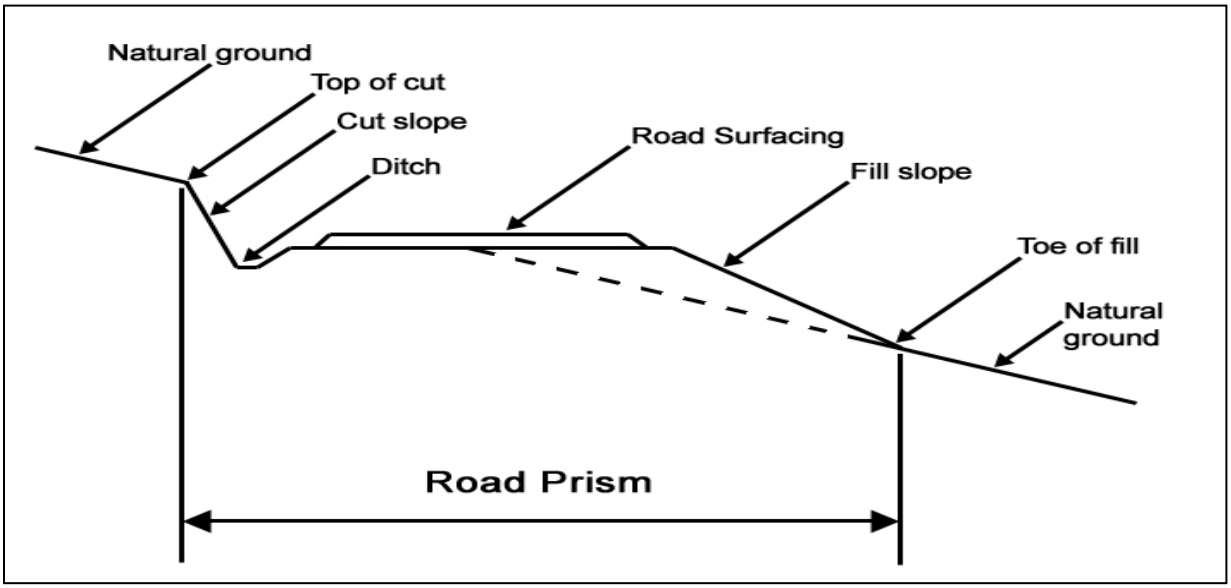

Figure 3.~~10~~6 Diagram showing the road prism.

Sediment traps are small temporary pooling areas, which collect and store sediment before diverting runoff water onto the forest floor. Sediment traps are usually excavated or constructed earthen embankments with a gravel outlet. Examples include:

Check dams constructed in a ditch to decrease flow velocities, minimize channel scour, and capture and store sediment.

Dead sumps are sediment traps without an outlet.

Silt fence is a tightly woven plastic fabric that comes in long rolls. The fabric is strung between wooden stakes. Silt fences are often used adjacent to waterways to prevent sediment from entering water. They are also used adjacent to disturbed soil areas to control erosion.

Spoils are excavated soils deposited in approved waste soil areas.

Straw blankets are made of straw stitched to a single net.

Straw wattles are tubes of straw used for erosion control, sediment control and runoff control. Wattles help to stabilize slopes by shortening the slope length and by slowing, spreading, and filtering overland water flow. This helps to prevent sheet erosion as well as rill and gully development, both of which occur when runoff flows uninterrupted down a slope.

Slash filter windrows are erosion control structures constructed of piled slash in a continuous row along the base of fill slopes. They are especially useful on fill slopes above water crossing culverts to catch road surface runoff that is flowing on the outside of the road.

RESOURCES

British Columbia Ministry of Forests, Forest Practices Code of British Columbia, Forest Road Engineering Guidebook, Second Edition, June 2002. www.gov.bc.ca/

Fifield, Jerals S. (2002). Field manual on sediment and erosion control best management practices for contractors and inspectors. Forester Communications. (Preface states that no part of book can be reproduced or utilized in any form or by any means, electronic or mechanical, including photocopying, recording, or by any information storage and retrieval system, without written permission from the publisher.)

Johansen, David Kim, 1997. Relief Culverts. San Dimas Technology and Development Center. United States Department of Agriculture, Forest Service, Technology and Development Program. 9777 1812-SDTDC.

Minnesota Forest Resources Council: http://www.frc.state.mn.us

National Council for Air and Stream improvements, Inc. (NCASI). 2000. Handbook of control and mitigation measures for silvicultural operations. Unpublished draft Technical Bulletin. Research Triangle Park, NC: National Council for Air and Stream Improvement, Inc.

Oregon Department of Forestry, Forest Roads Manual, June 2000.

USDA Natural Resources Conservation Service. 1996. Engineering Field Handbook - Stream bank and Shoreline Protection. Part 650, Chapter 16. [local NRCS office]

USDA Natural Resources Conservation Service. 1996. *Watershed Technology Electronic Catalog*. [//www.wcc.nrcs.usda.gov/wtec/wtec.html]

USDA Forest Service (USFS). 2000. Water/Road Interaction Technology Series: "Diversion Potential at Road-Stream Crossings"; "Response of Road-Stream Crossings to Large Flood Events in Washington, Oregon, and Northern California" By M. Furniss et al., Technology and Development Program. San Dimas, CA. [(909)599-1267]

Washington State Department of Ecology, Permit Assistance Center, http://www.ecy.wa.gov

~~**Washington State Department of Fish and Wildlife**, HPA, http://wdfw.wa.gov/habitat~~

Washington ~~Dept.~~Department of Fish and Wildlife. ~~1999. Fish Passage Design at Road Culverts: A design manual for fish passage at road crossings. Olympia WA. [//dfw.wa.gov]~~ 2003. Design of Road Culverts for Fish Passage. Bates, K.M. et al. http://wdfw,wa,gov/publications/00049/wdfw0049.pdf

Wetland plant indicators: http://plants.usda.gov