WASHINGTON STATE DEPARTMENT OF
Natural Resources

PETER GOLDMARK
Commissioner of Public Lands

April 25, 2011

MEMORANDUM

TO: Forest Practices Board

FROM: Marc Engel, Assistant Division Manager
Forest Practices Division, Policy and Services Section

SUBJECT: Extension of the Road Maintenance and Abandonment Plan (RMAP) Forest Road Work Completion Date Rule Making – Action Requested

On May 10, 2011, I will request the Board approval to proceed with the extension of the RMAP work completion date rule making by filing a CR-102 *Proposed Rule Making* with the enclosed rule language. The proposal provides forest landowners the opportunity to request an extension to the due date that all forest roads must be improved and maintained to the standards of chapter 222-24 WAC.

A summary of the proposed rule changes is as follows:

- Landowners may request DNR approval of extensions of up to five years, or July 1, 2021;
- Extension requests must be made at least 120 days prior to the anniversary date of the initial submittal of the RMAP in 2014;
- Extension requests must include the requested extension time period and a revised RMAP;
- Upon receipt of the extension request, DNR will provide up to forty five days for departments of ecology and fish and wildlife, affected tribes and interested parties to review the revised RMAP; and
- DNR must approve or disapprove the extension request at least thirty days prior to the anniversary date of the initial RMAP submittal.

On November 9, 2010, the Board directed staff to distribute the rule proposal for thirty day review and comment to the Department of Fish and Wildlife, counties and by practice, tribes. (This is a Forest Practices Act requirement for permanent rule making in RCW 76.09.040(2)). The review took place between November 10 and December 13, and the Board received the following two comment letters (enclosed) from the Department of Fish and Wildlife (WDFW) and the Lummi Indian Business Council.

- WDFW expressed concerns that the RMAP operational plan and the Forest Roads Board Manual may not meet the required reporting elements identified and agreed to by stakeholders. Specifically, that rule language may need to be modified to ensure that a revised RMAP needs to contain all the elements required in the rules, in a standardized format, and not submitted on a voluntary basis.
    - The Forest Practices rules, specifically 222-24-051(3) – (6) outline particular expectations for what will be required for an RMAP extension. Landowners will complete standardized forms as part of their RMAP extension.

- The Lummi Natural Resources Department expressed concern that "merely extending the completion date through amendment of the current rules without additional monitoring and enforcement of existing rules as a serious misstep in resource protection".

- The Lummi also stated that correcting non-compliance is not being enforced as evidenced by the current lack of compliance. If the extensions are to be granted "DNR must have the resources and will to monitor compliance with, and enforce, the existing laws and the terms of any extensions to the fullest extent provided" or extensions should not be granted.
  - The current forest practices rule in 222-24-051(11) states "If a landowner is found to be out of compliance with the work schedule of an approved road maintenance and abandonment plan and the department determines that this work is necessary to prevent potential or actual damage to public resources, then the department will exercise its authority under WAC 222-46-030 (notice to comply) and WAC 222-46-040 (stop work order) to restrict use of the affected road segment."
  - DNR is developing an operational plan that will provide standardized direction to all Forest Practices Regions. The direction stated above has been followed and will continue to be followed as non-compliant landowners need corrective action to bring them back into compliance.

DNR staff has completed a preliminary cost-benefit analysis and a small business economic impact statement (SBEIS) which are combined in the enclosed document entitled "Preliminary Economic Analysis." The SBEIS will be filed with the CR-102 and the entire analysis will be available for public review upon request. Staff has also prepared the required SEPA environmental checklist in anticipation of the Board's direction to proceed. The Board will consider the conclusions of these analyses when considering whether to adopt the rule.

If the Board approves filing the CR-102, staff will schedule public hearings to take place in early summer.

DNR convened a stakeholder process in March, 2011 to amend Board Manual Section 3, *Guidelines for Forest Roads*. This group addressed manual elements including standardization of information gathering, reporting and tracking, encouragement for stakeholders to consult with each other prior to submitting RMAP extension requests to DNR, and guidance on the format of annual meetings. DNR is requesting that the Board request staff to include the draft Board Manual Section 3, *Guidelines for Forest Roads* to distribute with the CR-102 rule packet for stakeholder and public review and comment. DNR will reconvene the board manual stakeholder group in May to add additional guidance as directed by the Board regarding the Ron Mally petition, and to finalize guidance for RMAPs.

I look forward to providing you further information on May 10th. If you have questions, please contact me at (360) 902-1390 or marc.engel@dnr.wa.gov.

MDE/
Attachment

Forest Practices Board
RULE PROPOSAL for
Extension of RMAP Forest Road Work Completion Date
May 2011

WAC 222-24-050 *Road maintenance and abandonment.
The goals for road maintenance are established in WAC 222-24-010. Guidelines for how to meet these goals and standards are in ~~the~~ board manual section 3. Replacement will not be required for existing culverts functioning with little risk to public resources or for culverts installed under an approved forest practices application or notification and are capable of passing fish, until the end of the culvert's functional life.

The goals for road maintenance outlined in this chapter are expected to be achieved by July 1, 2016. The strategies for achieving the goals are different for large forest landowners and small forest landowners.

For large forest landowners, all forest roads must be improved and maintained to the standards of this chapter prior to July 1, 2016; however, landowners may request an extension of up to five years, or July 1, 2021, as outlined in WAC 222-24-051(8). Work performed toward meeting the standards must generally be even flow over the ~~fifteen-year~~performance period with priorities for achieving the most benefit to the public resources early in the period. These goals will be achieved through the road maintenance and abandonment plan process outlined in WAC ~~22-24-051~~222-24-051.

For small forest landowners, the goals will be achieved through the road maintenance and abandonment plan process outlined in WAC 222-24-0511, by participation in the state-led family forest fish passage program, and by compliance with the Forest Practices Act and rules. The purpose of the family forest fish passage program is to assist small forest landowners in providing fish passage by offering cost-share funding and prioritizing projects on a watershed basis, fixing the worst fish passage barriers first. The department, in consultation with the departments of ecology and fish and wildlife, will monitor the extent, effectiveness, and progress of checklist road maintenance and abandonment plan implementation and report to the legislature and the board by December 31, 2008, and December 31, 2013.

WAC 222-24-051 *Large forest landowner road maintenance schedule.
All forest roads must be included in an approved road maintenance and abandonment plan by July 1, 2006. This includes all roads that were constructed or used for forest practices after 1974. Inventory and assessment of orphan roads must be included in the road maintenance and abandonment plans as specified in WAC 222-24-052(4).

*(1) Landowners must maintain a schedule of submitting plans to the department that cover 20% of their roads or land base each year.

(2) For those portions of their ownership that fall within a watershed administrative unit covered by an approved watershed analysis plan, chapter 222-22 WAC, landowners may follow the watershed administrative unit-road maintenance plan, providing the roads they own are covered by the plan. A proposal to update the road plan to meet the current road maintenance standards must be submitted to the department for review on or before the next scheduled road maintenance plan review. If annual reviews are not required as part of the watershed analysis road plan, the plan must be updated by October 1, 2005. All roads in the planning area must be in compliance with the current rules by July 1, 2016 or by the extension deadline approved by the department under subsection (8) of this section.

*(3) Plans will be submitted by landowners on a priority basis. Road systems or drainages in which improvement, abandonment or maintenance have the highest potential ~~benefit~~ benefits to the public resource are the highest priority. Based upon a "worst first" principle, work on roads that affect the following are presumed to be the highest priority:

(a) Basins containing, or road systems potentially affecting, waters which either contain a listed threatened or endangered fish species under the federal or state law or a water body listed on the current 303(d) water quality impaired list for road related issues.

(b) Basins containing, or road systems potentially affecting, sensitive geology/soils areas with a history of slope failures.

(c) Road systems or basins where other restoration projects are in progress or may be planned coincident to the implementation of the proposed road plan.

(d) Road systems or basins likely to have the highest use in connection with future forest practices.

*(4) Based upon a "worst first" principle, road maintenance and abandonment plans must pay particular attention to:

(a) Roads with fish passage barriers;

(b) Roads that deliver sediment to typed water;

(c) Roads with evidence of existing or potential instability that could adversely affect public resources;

(d) Roads or ditchlines that intercept ground water; and

(e) Roads or ditches that deliver surface water to any typed waters.

*(5) Road maintenance and abandonment plans must include:

(a) Ownership maps showing all forest roads, including orphan roads; planned and potential abandonment, all typed water, Type A and B Wetlands that are adjacent to or crossed by roads, stream adjacent parallel roads and an inventory of the existing condition; and

(b) Detailed description of the first years work with a schedule to complete the entire plan within ~~fifteen years~~the performance period; and

(c) Standard practices for routine road maintenance; and

(d) Storm maintenance strategy that includes prestorm planning, emergency maintenance and post storm recovery; and

(e) Inventory and assessment of the risk to public resources or public safety of orphaned roads; and

(f) The landowner or landowner representative's signature.

*(6) Priorities for road maintenance work within plans are:

(a) Removing fish passage barriers beginning on roads affecting the most habitat first, generally starting at the bottom of the basin and working upstream;

(b) Preventing or limiting sediment delivery (areas where sediment delivery or mass wasting will most likely affect bull trout habitat will be given the highest priority);

(c) Correcting drainage or unstable sidecast in areas where mass wasting could deliver to public resources or threaten public safety;

(d) Disconnecting road drainage from typed waters;

(e) Repairing or maintaining stream-adjacent parallel roads with an emphasis on minimizing or eliminating water and sediment delivery;

(f) Improving hydrologic connectivity by minimizing the interruption of surface water drainage, interception of subsurface water, and pirating of water from one basin to another; and

(g) Repair or maintenance work which can be undertaken with the maximum operational efficiency.

*(7) Initial plans must be submitted to the department during the year 2001 as scheduled by the department.

*(8) Requests to extend the completion date of road maintenance and abandonment plans may lead to the reapproval of the road maintenance and abandonment plan for up to five years, or July 1, 2021. Requests must be made at least one hundred twenty days prior to the plan's anniversary date by 2014.

(a) Landowner requests for an extension must include:

(i) The length of time for the extension period; and

(ii) A revised road maintenance and abandonment plan according to subsections (3) through (6) of this section.

(b) The department shall provide forty five days for the departments of ecology and fish and wildlife, affected tribes and interested parties to review a revised road maintenance and abandonment plan.

(c) The approval or a denial of a road maintenance and abandonment plan's extension request will occur at least thirty days prior to the anniversary date of the initial plan's submittal.

(d) A landowner with an approved extension and revised road maintenance and abandonment plan must report work accomplished in accordance with subsection (9) of this section.

*(9) Each year on the anniversary date of the plan's submittal, landowners must report work accomplished for the previous year and submit to the department a detailed description of the upcoming year's work including modifications to the existing work schedule.

The department's review and approval will be conducted in consultation with the departments of ecology~~, the department of~~ and fish and wildlife, affected tribes and interested parties. The department will:

(a) Review the progress of the plans annually with the landowner to determine if the plan is being implemented as approved; and

(b) The plan will be reviewed by the department and approved or returned to the applicant with concerns that need to be addressed within forty-five days of the plan's submittal.

(c) Additional plans will be signed by the landowner or the landowner's representative.

*(~~9~~10) The department will facilitate an annual water resource inventory area (WRIA) meeting with landowners, the departments of fish and wildlife~~, the department of~~ and ecology, affected tribes, the National Marine Fisheries Service, the U.S. Fish and Wildlife Service, affected counties, local U.S. Forest Service, watershed councils, and other interested parties. The purpose of the meeting is to:

(a) Suggest priorities for road maintenance and abandonment planning; and

(b) Exchange information on road maintenance and stream restoration projects.

*(~~10~~11)Regardless of the schedule for plan development, roads that are currently used or proposed to be used for timber hauling must be maintained in a condition that prevents potential or actual damage to public resources. If the department determines that log haul on such a road will cause or has the potential to cause material damage to a public resource, the department may require the applicant to submit a plan to address specific issues or segments on the haul route.

*(~~11~~12) If a landowner is found to be out of compliance with the work schedule of an approved road maintenance and abandonment plan and the department determines that this work is necessary to prevent potential or actual damage to public resources, then the department will exercise its authority under WAC 222-46-030 (notice to comply) and WAC 222-46-040 (stop work order) to restrict use of the affected road segment.

(a) The landowner may submit a revised maintenance plan for maintenance and abandonment and request permission to use the road for log haul.

(b) The department must approve use of the road if the revised maintenance plan provides protection of the public resource and maintains the overall schedule of maintenance of the road system or basin.

*(~~12~~13) If a landowner is notified by the department that their road(s) has the potential to damage public resources, the landowner must, within 90 days, submit to the department for review and approval a plan or plans for those drainages or road systems within the area identified by the department.

*(14) The department will notify the departments of ecology and fish and wildlife, affected tribes and interested parties if actions taken under this section result in a change to an approved road maintenance and abandonment plan.

(15) When the department approves or denies a road maintenance and abandonment plan extension under subsection (8) of this section, that decision may be appealed to the appeals board in accordance with RCW 43.21B.110 and 43.21B.230.

PRELIMINARY ECONOMIC ANALYSIS
Forest Practices Board
Rule Making Affecting Road Maintenance and Abandonment Plans

By Craig Calhoon, Economist
Department of Natural Resources
April 21, 2011

OBJECTIVES

The Forest Practices Board is considering a rule change to allow forest landowners who have Road Maintenance and Abandonment Plans (RMAPs) to apply for an extension of the deadline for up to five years. The proposed rule change would amend WAC 222-24-050 and -051, changing the completion date for RMAPs from July 1, 2016 to July 1, 2021.

The Board's objective is to be responsive to a request from private forest landowners with RMAPs to adjust the RMAP completion schedule to provide relief from a reduced cash flow situation in Washington's timber industry due to the recent economic recession without reducing the legal commitment to complete forest road improvements necessary to protect and restore water quality and fish habitat.

CONTEXT

Existing Rule on Road Maintenance and Abandonment Plans

In 1999 the Washington State Legislature enacted the Salmon Recovery Act (Chapter 4, Laws of 1999). In it, the Forest Practices Board was strongly encouraged to follow the recommendations of the April 29, 1999 Forests and Fish Report when adopting rules for the protection of aquatic resources. The rules were to accomplish a variety of policies listed in RCW 76.09.010 "without jeopardizing the economic viability of the forest products industry" (RCW 76.09.370).

The Board fulfilled this mandate by adopting emergency rules in early 2000 and permanent rules in 2001. These rules, commonly referred to as the Forests and Fish rules, included a requirement for forest landowners to assess the roads on their properties and plan for ongoing maintenance of existing roads, abandonment of certain roads, and repair or replacement of fish passage structures. The purpose of the road maintenance and abandonment plan was to ensure that management of all forest roads would maintain or provide passage for fish in all life stages, provide for the passage of woody debris likely to be encountered in a 100-year flood event, and meet water quality standards by limiting and controlling sediment delivery and surface runoff to typed waters, protecting stream bank stability, and diverting most road runoff to the forest floor.[1] The rules specified a deadline of July 1, 2006 for landowners to complete these road maintenance and abandonment plans and a deadline of July 1, 2016 for completing the work identified in the plans. These deadlines followed the recommended timelines in the Forests and

[1] WAC 222-24-010(2) and Forests and Fish Report, Appendix D, section I (a), April 29, 1999.

Fish Report of five years after the adoption date of the rules for completing the road plans and 15 years after the rule adoption date for completing the road work.

According to the May 2010 report by the "Staff Group" to the Road Policy Work Group of the Forests and Fish Policy Committee entitled "Information Compiled to Help Evaluate the Consequences of Extending the Implementation Period for Road Maintenance and Abandonment Plans in Washington" (hereinafter referred to as "Policy Staff Group" report)[2], the 15 year RMAP performance period was not based on science (p. 16). At the time the Forest and Fish rules were developed, 15 years of "worst-first" implementation was considered a reasonable time frame to balance economic and resource protection considerations.

In 2003 the Legislature amended the forest practices statute to simplify the requirements of road maintenance planning for small forest landowners and to establish a cost-share program to help fund the removal of fish blockages on their lands (Second Substitute House Bill 1095). Rules implementing this legislation are codified in WAC 222-24-0511 which describes road maintenance planning requirements for small forest landowners[3]. Small forest landowners were exempted from the requirement to complete a formal road maintenance and abandonment plan and were only required to submit a "checklist" RMAP when they submit a forest practices application. Small forest landowners who own a total of 80 acres or less of forest land in the state are not required to submit any type of road maintenance and abandonment plan for any block of land that contains 20 contiguous acres or less.

Large forest landowners[4] are still required to complete a road maintenance and abandonment plan and complete all RMAP work by July 1, 2016. This work requires significant expenditures each year and is primarily financed by revenues generated from timber harvests. For many timber companies, the economic recession of the past several years has slowed the cash flow necessary to fund the annual RMAP work required for forest road improvements and fish passage barrier repairs. In the summer of 2010, the Forests and Fish Policy Committee recommended that the Board amend the RMAP rules to allow large forest landowners[5] to apply

---

[2] This report is available at http://www.dnr.wa.gov/Publications/bc_fp_materials_20100810.pdf, "F&F Policy's RMAPS Proposal Recommendation–Hotvedt."

[3] "Small forest landowner" is defined in WAC 222-16-010 as "a forest landowner who at the time of submitting a forest practices application or notification meets all of the following conditions:

- Has an average annual timber harvest level of two million board feet or less from their own forest lands in Washington state;
- Did not exceed this annual average harvest level in the three year period before submitting a forest practices application or notification;
- Certifies to the department that they will not exceed this annual harvest level in the ten years after submitting the forest practices application or notification."

[4] "Large forest landowner" is defined in WAC 222-16-010 as a forest landowner who is not a small forest landowner.

[5] As part of the negotiations among Forests and Fish Policy Committee members on moving this proposed rule forward, the State of Washington agreed not to seek an RMAP time extension on public lands managed by the Department of Natural Resources and the Department of Fish and Wildlife, even though the proposed rule change language would allow it.

for an extension of the RMAP deadline for up to five years, or until July 1, 2021, without reducing the legal commitment to complete RMAP work necessary to protect and restore water quality and fish habitat.[6] On August 10, 2010, the Board directed staff to begin the rulemaking process.

Road Maintenance and Abandonment Plan Work Status

The current requirement is for all RMAP work to be done within a 15 year period, from July 1, 2001 to July 1, 2016. The work is to be undertaken and accomplished at an "even-flow" rate, with landowners making sufficient progress each year so that all the necessary work is completed by the July 1, 2016 deadline. The RMAP work items are to be prioritized under a "worst first" principle to achieve the most benefit to public resources earlier in the RMAP period.

The Department of Natural Resources' (DNR's) "RMAP Accomplishment Summary for 2001 through 2010"[7] contains information on the progress made on RMAP work on forest land ownerships under 262 road maintenance and abandonment plans through December 2010, as shown in **Figure 1**. The data is for the first 9 ½ years, or 63%, of the 15 year period in which

FIGURE 1. RMAP Work Accomplished As of 12-31-10

Years Into 15-Year RMAP Work Period	Miles of Forest Roads Assessed	Miles of Road Improvement	Miles of Road Abandon-ment	Miles of Orphaned Roads	Total Number of Fish Passage Barriers Identified	Number of Structures Fixed on Fish Habitat Streams	Miles of Fish Stream Habitat Opened
9 1/2	57,442	20,494	2,915	2,333	7,025	3,769	1,772
63%						54%	

RMAP work is to be completed under current Forest Practices rules. The data show that 20,494 miles of road improvement work were completed in this time period (through 2010). Road segments totaling 2,915 miles of road were abandoned. A total of 3,769 fish passage barriers were fixed, or 54% of the total number of 7,025 identified as needing to be addressed in RMAPs.

---

[6] In addition to the proposed rule change allowing for an RMAP time extension, the Forests and Fish Policy Committee members agreed to other RMAP program initiatives to be implemented outside of rules. Most notably, RMAP reporting requirements and data management will be improved with DNR developing and maintaining a standardized system to receive, track, and report RMAP accomplishments. Improvements in project tracking will help DNR, stakeholders, and tribes evaluate RMAP project priorities and scheduling. In addition, the Forests and Fish Policy Committee members agreed to collaboratively work to seek additional state and federal funding for road maintenance and fish passage improvements on small forest landowners' lands and under county roads.

[7] This report is available from the Department of Natural Resources Forest Practices Division at (360) 902-1400.

This data suggests that the RMAP fish passage barrier removal work may be behind the even flow rate.

In a separate February 2010 survey of large private and public forest landowners, the Washington Forest Protection Association (WFPA) found that 56% of fish passage barriers located specifically on salmon, steelhead, and bull trout waters had been removed. This supports the conclusion in the DNR report that 54% of all fish passage barriers needing replacement had been removed as of the end of 2010.

Another measure of the state of progress on RMAP work is given in the May 2010 "Policy Staff Group" report. In April 2010, a survey regarding RMAP completion was sent to DNR's six region RMAP specialists who answered based on a representative sample of RMAPs in each of the regions. The results indicated that while most RMAPs (59%) had experienced significant implementation delays and while 21% were still significantly behind schedule, the majority–79%–were now either on or ahead of schedule (pp. 7-9). There was no discernable difference in completion rate among the four RMAP landowner categories–large industrial, small industrial, public agency, and small forest landowner.

PROPOSED RULE

The rule proposal affects WACs 222-24-050 and -051. It allows forest landowners with road maintenance and abandonment plans to apply for an extension of the timeline for completion of work specified in their RMAPs for up to five years, or until July 1, 2021 at the latest. In addition, it specifies a process for landowners requesting a time extension and a process for DNR to allow for a multi-stakeholder review of a landowner's request for a time extension:

- Landowners may request time extensions at least 120 days prior to their initial RMAP anniversary date in 2014, specify the length of time for the extension period, and include a revised plan that follows the existing requirements outlined in WAC 222-24-051, subsections (3) through (6). Generally, the schedule of work is to be based on an "even-flow" pace and a "worst first" principle: road work with the highest potential to benefit public resources is required to be given the highest priority in plans.

- DNR will provide a 45-day review period for the Departments of Ecology and Fish and Wildlife, affected tribes, and interested parties to review and comment on revised plans. DNR will then approve or deny RMAP time extension requests at least 30 days prior to the anniversary date of an initial plan.

If any actions are taken that result in a change to a revised plan after approval, DNR will notify the Departments of Ecology and Fish and Wildlife, affected tribes, and interested parties.

COST-BENEFIT ANALYSIS

The Administrative Procedure Act (RCW 34.05.328) requires agencies to complete a cost-benefit analysis before adopting a significant legislative rule. An agency cannot adopt a significant legislative rule unless it:

- Determines that the probable benefits of the rule are greater than its probable costs, taking into account both the qualitative and quantitative benefits and costs and the specific directives of the statute being implemented; and

- Determines, after considering alternative versions of the rule, that the rule being adopted is the least burdensome alternative for those required to comply with it that will achieve the general goals and specific objectives of the statute that the rule implements.

Benefits

The proposed rule change is intended to provide relief to large forest landowners for whom the recent economic recession has compromised their ability to get their required RMAP work done by the current July 1, 2016 deadline. The rule change would allow them to delay some of their work for up to an additional five years, thereby reducing the near-term annual cost of RMAP compliance. It does not change the total amount of expenditures required, but it does reduce the present value of the future expenditures by spreading them over a longer future period. In addition to this financial benefit, the time extension would also provide some additional business flexibility.

As stated previously, the State of Washington has agreed not to seek an RMAP time extension on lands managed by the Department of Natural Resources and the Department of Fish and Wildlife. Also as stated before, the Forest Practices rules were previously amended to exempt small forest landowners from the more extensive RMAP requirements. Therefore the economic impacts of the proposed RMAP rule change are limited to large private forest landowners, which is the regulated community in this case.[8]

The May 2010 "Policy Staff Group" report (p. 12) cites a survey by the Washington Forest Protection Association (WFPA) of its membership which consists of large private forest landowners on 4.04 million acres (representing about 88% of all large forest landownership). In early 2009, WFPA asked its members to estimate the cost of finishing their remaining RMAP work, based on the requirement to complete all work by July 1, 2016. From the survey results, WFPA estimated that, in 2009 dollars, its members would spend approximately $133 million to complete their remaining required RMAP work.

In order to assess the economic benefit of the RMAP time extension to large private forest landowners, the WFPA estimate of remaining RMAP costs is first updated to correspond to the effective date of the proposed rule (if it should be adopted). An effective date of October 1, 2011

[8]There are some small forest landowners who elected to plan under a full RMAP pursuant to WAC 222-24-050; those landowners would be authorized to request an extension just as large forest landowners would under the proposed rule.

is assumed based on a presumption that the Board would adopt the rule at its August 9, 2011 meeting. Therefore almost three annual outdoor construction seasons will have elapsed from the time of the WFPA survey in early 2009 to the effective date of October 1, 2011. The May 2010 "Policy Staff Group" report cites another survey by the WFPA of its membership of large private forest landowners in April 2010 which concluded that these large private forest landowners spent an average of $13.10 million per year on RMAP work through 2009 on their 4.04 million acres. Even though timber stumpage prices had moved dramatically down in 2008, these companies spent $14.98 million on RMAP work that year. But because of the cumulative impact of the economic recession, they spent only $8.44 million on RMAP work in 2009. Given that timber stumpage prices have since recovered from their periodic lows in 2008 and the first half of 2009, we are assuming that RMAP expenditures by the WFPA membership increased somewhat to $10 million in the 2010 construction season (still considerably below the average annual expenditure). We also assume that $12 million will be spent in the 2011 construction season (still below the average annual expenditure) as timber stumpage prices continue to rebound. It is therefore estimated that WFPA member forest landowners will need to spend approximately $102.56 million ($133 million - $8.44 million - $10 million - $12 million) to complete their RMAP work by the current deadline.

Next, the amount estimated to complete RMAP work on WFPA members' forest lands must be adjusted to account for all large forest landowners' lands. According to the May 2010 "Policy Staff Group" report, there are approximately 600,000 acres of industrial forest land on which RMAPs are likely required beyond the 4.04 million acres owned by WFPA members. Assuming that the additional 600,000 acres have similar attributes to the WFPA members' lands, the amount of funds required to complete RMAP work on all large forest land ownerships is estimated to be $117.8 million ($102.56 million x 4.64 million acres / 4.04 million acres = $117.8 million).

Finally, to assess the economic benefit of the RMAP time extension to large private forest landowners, the present value of the amount needed to fund the annual payments for $117.8 million in RMAP work prior to July 1, 2016 (the current deadline) is compared with the present value of the amount needed to fund the annual payments for the same $117.8 million in RMAP work prior to July 1, 2021 (the proposed deadline). Even though the time periods starting October 1 and ending July 1 do not correspond with the beginning and end of the annual construction period, it is assumed that there are five years of work remaining under the current deadline and ten years of work remaining under the proposed deadline. To complete the remaining work in five years would require expenditures of $23.6 million per year and in ten years $11.8 million in annual payments would be required to complete the work. The current values of amounts required under the two scenarios, assuming a five percent discount rate, are shown in **Figure 2**.

The total potential benefit to large private forest landowners is $11.1 million ($102.2 million minus $91.1 million) in net present value in current dollars. This means that they would need $11.1 million less in current funds in order to meet their RMAP obligations under the proposed time extension as opposed to the current deadline.

FIGURE 2. Current Amount of Funds Necessary to Cover Remaining RMAP Expenditures on Private Large-Owner Forestlands Under Alternative Deadlines

RMAP Completion Deadline	Years of RMAP Work Remaining	Annual Expenditures	Current Value
July 1, 2016 (current deadline)	5	$23.6 million	$102.2 million
July 1, 2021 (proposed deadline)	10	$11.8 million	$ 91.1 million
Net Present Value			$ 11.1 million

The actual benefit is likely to be much less because it is likely that not all of the landowners with RMAPs will elect to apply for time extensions. For example, if landowners representing half the acreage under RMAPs decide to proceed with their RMAP work by the current deadline of July 2016, then the realized benefit of the proposed rule would be only half as much, or $5.6 million in net present value.

In addition to this financial benefit to the landowner community, costs to landowners who are unable to complete RMAPs by 2016 may be averted if this rule is adopted. If the proposed rule change is not adopted and a landowner is found to have not completed the required RMAP work by 2016, DNR may need to take compliance or enforcement action (for example, notices to comply or stop work orders) to ensure public resource protection. This is a very costly process for both the state and the landowner, particularly when there are compliance issues across several forest road networks which would need to be addressed on a site-by-site basis. Extending the deadline for landowners who have a legitimate need will maintain a schedule for landowners to complete the required road work necessary to protect public resources and for DNR to comply it. Ensuring RMAP work will be conducted within a structured RMAP schedule will prevent costly enforcement processes.

Costs

The purpose and overall goal of the road maintenance and abandonment plans and the associated road maintenance and abandonment work and fish passage barrier work is to protect and restore water quality and fish habitat. The sooner the work is completed, the sooner the habitat improves or becomes accessible. The main cost of the proposed rule change is the delay in realizing these intended environmental benefits that would result from a delay in completion of RMAP work. Under the proposed rule, the work would still be required to be done but it could be spread out over five additional years.

This economic analysis relies on the associated Environmental Checklist and Determination of

Nonsignificance[9] for the proposed rule as the source for more detailed information about its environmental impacts (delayed benefits). The Environmental Checklist does not quantify the environmental impacts of a delay in the remaining RMAP work in terms of physical effects (e.g., sediment input, habitat quality) or biological response (e.g., fish populations) and it is also not conclusive about the qualitative impacts on fish populations that would be caused by extending the RMAP deadline. The checklist is hereby incorporated by reference and its findings are summarized below.

The Environmental Checklist concludes the following about sediment from roads and the impact on water quality:

- The rule proposal is not expected to cause increases in discharge of sediment from forest roads. The existing forest practices rules require roads to be constructed and maintained so as not to result in sediment and surface water delivery from forest roads to any typed water in amounts that preclude achieving desired fish habitat and water quality.

- There is the potential that some delay in road improvements could cause a delay in addressing previously unidentified road-related sediment discharges to streams, which could affect fish habitat.

The Environmental Checklist concludes the following about fish passage barriers and the impact on fish populations:

- Barriers to fish passage in a stream system prevent the system from reaching its natural productive capacity for fish.

- Barrier removal may increase fish access to potential upstream habitat, which in turn may facilitate increased fish populations by providing access to historic habitat.

- The number and geographic location of inadequately sized water crossing structures that would remain in place after 2016 cannot be precisely known.

- Assessing the proposal's impacts on fish, including salmonids, is an extremely difficult endeavor. Forest road networks cross many different land ownerships, only some of which are subject to Forest Practices Act jurisdiction. Fish passage barriers are ubiquitous on stream systems on Washington forest lands. Complicating things, some fish are anadromous species and spend their lives in both freshwater and saltwater environments. This variety of habitats can present an enormous array of environmental pressures on fish, only one of which is fish passage barriers in the forest environment. It is not possible to isolate the impacts of a five-year delay in the remediation of these barriers from other environmental impacts that fish encounter.

[9] The Environmental Checklist and threshold determination (Determination of Nonsignificance) can be found at http://www.dnr.wa.gov/BusinessPermits/Topics/ForestPracticesRules/Pages/fp_rules_activity.aspx, under the heading, "Extension of RMAP Forest Road Work Completion Date."

The Environmental Checklist discusses the following about possible failures of inadequately engineered stream crossing structures:

- Storm events and the likelihood that existing stream crossing structures will fail are impossible to predict; thus, whether structures that are allowed to remain beyond 2016 will fail and cause impacts, is speculative.

- There is the chance this will occur in one or more locations, having a localized and temporary impact on the downstream environment. A possible impact is that some culverts and bridges could fail during the time that their replacement is delayed, thereby increasing the possibility of impacts on environmentally sensitive sites downstream.

Other factors discussed in the Environmental Checklist are relevant to the cost benefit analysis because they tend to reduce the potential adverse environmental impacts (costs):

- A majority of RMAPs are now either on or ahead of schedule. Twenty of the 262 RMAPs statewide have already been completed and, according to the Forest Practices 2010 RMAP Accomplishment Report, with six years remaining under the current 2016 deadline over half of the fish passage barriers had been removed (3,769 out of more than 7,000), over 1,700 miles of fish habitat have been opened, and over 20,000 miles of roads had been improved to meet standards.

- The work already completed under the RMAP process has been found effective in minimizing sediment delivery to streams. A 2008 study performed for the WFPA found that 73 percent of the forest roads sampled had a low probability of delivering sediment to a typed water course and that 82 percent of the road length studied had either low delivery potential or was hydrologically disconnected. This result was attributed to the road planning, relocation, abandonment, and disconnection activities that had already occurred under the RMAP program at that time.

- Concurrent with this rule making DNR is developing a statewide RMAP status database, in part to help provide certainty that the road work in RMAPs will be accomplished on a worst first and even flow basis. We believe this measure, along with the involvement of landowners and stakeholders in providing input to DNR in the decision to allow RMAPs schedule adjustments, and the 2014 deadline to request an extension of an RMAPs schedule, will help ensure that the road work with most potential to prevent damage to public resources will be given the highest priority in adjusted schedules if the rule is adopted.

- Without the proposed rule, the RMAPs performance period will expire, and water crossing and road condition issues will need to be addressed by DNR using administrative enforcement actions on a road-by-road, location by location basis. By allowing RMAP time extensions for landowners who need them, the proposed rule will help to ensure that their remaining forest road repairs will be completed on a worst-first, even-flow schedule and in a coordinated, orderly manner. This would achieve the best possible results for fish as soon as possible.

In summary, the Environmental Checklist indicates that the proposal will allow some portion of the existing fish passage barriers and inadequately engineered water crossing structures to remain on the landscape for up to five years beyond 2016. The Checklist also recognizes that many of the problematic structures would also remain on the landscape even without the rule change (due to the fact that some landowners fell behind on RMAP progress during the recession). If there were no rule change, however, DNR would need to address the problematic stream crossings through costly site-by-site enforcement actions.

After assessing the environmental effects of the proposal along with landowners' progress to date, the effectiveness of that work on public resources, and new administrative measures to help provide certainty that the road work in RMAPs will be accomplished on a worst first and even flow basis, the Board in its Determination of Nonsignificance has determined it will not result in significant adverse environmental impacts.[10]

There are two additional cost impacts, but they are considered minor:

- Landowners who elect to apply for an RMAP time extension would incur the costs of revising and updating their road maintenance and abandonment plan(s). The remaining RMAP work to be completed would need to be rearranged into a new, longer time schedule. This cost should not be significant since the base information already exists in the current approved RMAP.

- Although the proposed rule does not change the overall cost of RMAP road work remaining to be completed, it does impact the timing of the costs because it will move some of the road construction work forward in time. As described above, this deferring of costs into the future is a benefit to landowners. However, it represents a cost to road construction businesses and workers because some of the work they would otherwise be doing by 2016 would be deferred into the future. It is estimated that almost all of the RMAP road work is contracted out to road construction businesses rather than being done internally by the landowners with their own employees and equipment. Under the proposed rule and to the extent that landowners elect to apply for time extensions on their RMAPs work, there will be fewer road construction jobs and income in 2011-2016 and more in 2016-2021.

<u>Comparison of Benefits and Costs</u>

The total potential benefit to large private forest landowners due to the ability to extend the RMAP deadline is estimated to be $11.1 million net present value in current dollars The actual benefit is likely to be less because it is likely that not all landowners will elect to apply for RMAP time extensions. An additional benefit is that landowners will avoid the costs associated with enforcement and/or compliance actions in cases where they are not able to complete RMAP work by 2016.

[10] Ibid.

The main cost of the proposal is the delay in realizing the intended environmental benefits of RMAPs (the protection and restoration of water quality and fish habitat) that would result from a delay in completion of RMAP work. The work associated with RMAPs would still be required to be done, but for some landowners it would be spread over five additional years. The Board has determined, after assessing the environmental effects of the proposal along with other measures to ensure public resource protection, that the proposed rule will not result in significant adverse environmental impacts.

Therefore, it is reasonable to conclude that the probable benefits of the proposal are greater than its probable costs.

Alternatives to Rule Making and Consequences of Not Adopting the Rule

In their work, the Sub-Policy Group to the Forests and Fish Policy Committee which developed the recommended rule change reviewed two other alternatives for extending the RMAP completion deadline.

The first was to allow landowners to decide whether to update RMAPs to meet an extended deadline (up to five years) that would be tied to economic indicators (e.g., new housing starts or timber stumpage prices). The Group reviewed economic data and projections and contemplated an adjustable schedule but a number of members thought this was not a desirable or appropriate method for determining the duration of a time extension.

The other alternative considered was to extend the deadline by five years and provide a tax incentive to encourage landowners to complete their RMAP work sooner. This option was deemed to be problematic given the need for enacting legislation and the current grim condition of state and county budgets due to dramatically reduced tax revenues.

In addition, both of these alternatives would require additional data reporting and tracking requirements.

If the proposed rule change is not adopted, certain large private forest landowners who remain significantly negatively financially impacted by the recent economic recession may not be able to complete their RMAP work by July 1, 2016. If a landowner is found to be out of compliance with the RMAP work schedule and DNR determines that this work is necessary to prevent potential or actual damage to public resources, DNR would need to take compliance or enforcement action (for example, notices to comply or stop work orders).

Least Burdensome Alternative

The Administrative Procedure Act states that agencies cannot adopt a significant legislative rule unless it determines after considering alternative versions of the rule that the rule being adopted is the least burdensome alternative for those required to comply with it that will achieve the general goals and specific objectives of the statute that the rule implements.

The proposed rule change is not burdensome on the regulated community and it is less burdensome than the other alternatives described above. It is less burdensome than the alternative of not adopting the rule change because it gives the forestland owner the choice of whether to apply for the up-to-five-year time extension. It is less burdensome than the alternative of tying the termination of the time extension to economic indicators because the length of the extended period could be cut short depending on the economic indicators selected (for example, timber stumpage prices have recovered sharply in the second half of 2009 and 2010 from their periodic lows in 2008 and the first half of 2009). It is less burdensome than the alternative of extending the deadline by five years and providing a tax incentive to encourage landowners to complete their RMAP work sooner because of the high degree of uncertainty surrounding the possibility and timing of actually getting such a tax break legislatively enacted.

SMALL BUSINESS IMPACTS

A small business economic impact statement is required by the Regulatory Fairness Act (chapter 19.85 RCW) to consider the impacts on small businesses of administrative rules adopted by state agencies. The statute defines small businesses as those with 50 or fewer employees. To determine whether the proposed rule will have a disproportionate cost impact on small businesses, the impact statement compares the cost of compliance for small business with the cost of compliance for the ten percent of businesses that are the largest businesses required to comply with the proposed rule.

Small Business Analysis

There are no new or additional requirements or costs imposed on any members of the regulated community by the proposed rule change since it affords the opportunity for large forest landowners to elect to apply for an extension of the RMAP performance period of up to five years. Choosing whether to extend the RMAP performance period is voluntary on the part of the business (landowner), whether it is a large business, a small business, or an individual. Therefore there is no disproportionate cost impact on small businesses[11].

Reducing Costs for Small Businesses

RCWs 19.85.030 and .040 address an agency's responsibility in rule making to consider how costs may be reduced for small businesses, based on the extent of disproportionate impact on the small businesses. As stated above, there is no disproportionate impact on small businesses.

Estimated Number of Jobs Created or Lost

RCW 19.85.040 (2)(d) requires that the small business economic impact statement include "(a)n estimate of the number of jobs that will be created or lost as the result of compliance with the proposed rule."

[11] "Small businesses" for the purpose of this analysis are those members of the regulated community (large forest landowners) with 50 or fewer employees and is not to be confused with "small forest landowners" which has a distinct statutory definition.

The proposed rule does not result in any jobs being created or lost. However, as described above, the number of road construction jobs involved in doing RMAP work would be fewer in 2011-2016 and those jobs lost the first five years would be shifted forward into the last five years, when there would have been no RMAP-related jobs.

SUMMARY

The total potential benefit to large private forest landowners due to the ability to extend the RMAP deadline is estimated to be $11.1 million in net present value in current dollars. The actual benefit is likely to be less because it is likely that not all landowners will elect to apply for RMAP time extensions. An additional benefit is that landowners will avoid the costs associated with enforcement and/or compliance actions in cases where they are not able to complete RMAPs by 2016.

The main cost of the proposal is the delay in realizing the intended environmental benefits of RMAPs (the protection and restoration of water quality and fish habitat). The work associated with RMAPs would still be required to be done, but for some landowners would be spread over five additional years. The Board has determined, after assessing the environmental effects of the proposal along with other measures to ensure public resource protection, that the proposed rule will not result in significant adverse impacts.

Therefore, it is reasonable to conclude that the probable benefits of the proposal are greater than its probable costs.

Two alternatives to adopting this rule were considered and rejected: tying the proposed RMAP time extension to economic indicators and providing a tax incentive for landowners to complete RMAPs work sooner during an extended period. For reasons explained in the “Least Burdensome Alternatives” section, they were rejected as being undesirable. The proposed rule change is not burdensome on the regulated community and it is less burdensome than the other alternatives.

There is no disproportionate cost impact on small businesses. Choosing whether to extend the RMAP performance period is voluntary on the part of the business (landowner).

The proposed rule does not result in any jobs being created or lost.

State of Washington
Department of Fish and Wildlife

Mailing Address: 600 Capitol Way N, Olympia WA 98501-1091, (360) 902-2200, TDD (360) 902-2207
Main Office Location: Natural Resources Building, 1111 Washington Street SE, Olympia WA

December 13, 2010

Forest Practices Board Rules Coordinator
Department of Natural Resources
Forest Practices Division
P.O. Box 47012
Olympia, WA 98504-7012

SUBJECT: 30-Day Comments on Proposed RMAP Extension Rule

Dear Ms. Anderson:

The Washington Department of Fish and Wildlife (WDFW) has reviewed the proposed rule changes that would allow landowners to apply for an extension to the Road Maintenance and Abandonment Plan (RMAP) deadline.

The Department acknowledges and applauds the significant amount of work many landowners have accomplished in fulfilling the existing rule requirements. We also understand the very difficult economic situation has had, and continues to have, significant impacts on the ability of forest landowners to fulfill their current RMAP obligations.

While WDFW supports the rule proposal moving into the public review period, it is critical to also develop and implement the Board Manual and operational modifications embodied in the Forests and Fish Policy RMAP Subgroup Recommendations. These elements were essential for stakeholder support of the rule moving forward, the success of the RMAP program, and also Forests and Fish stakeholder relationships.

We are very concerned the RMAP operational plan currently under development by the Department of Natural Resources (DNR), as well as the yet-to-be-developed Board Manual, may not meet the required elements identified and agreed to by stakeholders. Specifically, we believe stakeholder approval was based on requiring landowners requesting an extension to submit a revised RMAP that includes all RMAP issues covered by the rules, in a standardized format. Without these requirements, it will be very difficult, if not impossible, for DNR, stakeholders, and the general public, to determine whether the work will be accomplished on an even-flow basis, under the "worst-first" priority, and whether all work will be completed within the performance period. Therefore, the proposed rule language may need to be modified to ensure that these minimum elements are required by landowners, and not submitted on a voluntary basis.

Thank you for the opportunity to provide input to the rule proposal. We look forward to continuing to work with DNR and the stakeholders during the rule-making process, as well as on the operational plan and the board manual.

Sincerely,

David Whipple
Forest Policy Coordinator

LUMMI INDIAN BUSINESS COUNCIL

2616 KWINA ROAD · BELLINGHAM, WASHINGTON 98226 · (360)384-1489

DEPARTMENT_____DIRECT NO. _____

DATE RECEIVED
DEC 16 2010
Forest Practices Division

Lummi Natural Resources Department
Office of the Director
2616 Kwina Road
Bellingham, WA 98226-9291

December 12, 2010

Patricia Anderson
Forest Practices Board Rules Coordinator
Washington State Department of Natural Resources
Forest Practices Division
P.O. Box 47012
Olympia, WA 98504-7012
Fax: (360) 902.1428
Email: forest.practicesboard@dnr.wa.gov

Dear Ms. Anderson:

Through this letter, we are responding to your request for comments to three separate sets of proposed amendments to the Forest Practice Rules.

Proposal 1: Amendment of the Rules to include forest biomass in the definition of Forest Practices. We see this addition to the definition of forest practices as a positive step in maintaining the DNR's ability to permit and regulate activities on lands under the state's jurisdiction.

Proposal 2: Amendment of the Rules to Extend the Forest Road Work Completion Date. We have grave reservations over extending the forest road completion date beyond the current date of July 1, 2016. While there are some positive aspects to this proposal, such as the continuing provision for tribal review and input into the RMAP process (with improvements in its implementation), correction of all remaining fish passage barriers by the original completion date, and similar corrections of other worst first conditions, we see merely extending the completion date through amendment of the current rules without additional monitoring and enforcement of existing rules as a serious misstep in resource protection.

To begin with, the concept of even flow throughout the performance period is part of the existing rules, yet the findings in the May, 2010 report from the Staff Work Group to the Road Policy Work Group demonstrate that this concept has not been fully implemented on the ground. In the Northwest region alone, the Staff Work Group reported that over 50% of the Large Forest Land Owners (LFLOs) are significantly behind in completing

the road-related work in their respective Road Maintenance and Abandonment Plans (RMAP).

Furthermore, the legal mechanism for correcting non-compliance with the RMAP work schedules is part of the current rules; however, such provisions are clearly not being enforced, as is evidenced by the current lack of compliance. We do not consider the continuance of this pattern on non-compliance as being acceptable in any way under the current date for completion, much less under an extended one.

Finally, if extensions are going to be granted, then DNR must have the resources and will to monitor compliance with, and enforce, the existing laws and the terms of any extensions to the fullest extent provided. Failing this, no extensions should be granted.

Proposal 3: Amendment of the Rules to provide for Watershed Re-Analysis
Prescriptions developed through Watershed Analysis must never allow less-protective measures for typed waters or other public resources than those provided under the Forest Practice Rules. Further, changes in Forest Practice Rules that subsequently increase protective measures must always supersede any prescriptions whose adoption would otherwise allow the use of lesser measures. At the same time, we recognize that harvest opportunities which would otherwise not exist under the standard rules may still be available through the use of alternate plans. These plans should not supersede prescriptions in cases where the protective measures afforded by prescriptions exceed those in the standard rules.

We hope that these comments are helpful in the formulating the final wording of these proposals and in planning for DNR's future efforts in compliance monitoring, and enforcement. If you have questions or need further information, please contact Gregg Dunphy of my staff. He may be reach via telephone at 360-410-1743, via s-mail at our address, above, or via e-mail at greggd@lummi-nsn.gov. Thank you for soliciting and accepting our input. We look forward to continuing to work together in using and protecting our natural resources.

Sincerely,

Merle B. Jefferson, Director
Lummi Natural Resources Department

Section 3
Guidelines for Forest Roads

PART 1. OVERVIEW **2**
PART 2. ROAD MAINTENANCE AND ABANDONMENT PLANNING **2**
2.1 Road Maintenance and Abandonment Plans 2
2.2 Changes in Ownership 3
2.3 Family Forest Fish Passage Program 8
PART 3. ROAD LOCATION AND DESIGN **9**
3.1 Location BMPs 9
3.2 Design BMPs 10
Figure 3.1 Road shape designs 11
Table 3.1 Comparison Chart for Road Shape 12
PART 4. ROAD CONSTRUCTION AND MAINTENANCE **13**
4.1 General Construction BMPs 13
4.2 Compaction and Stabilization 13
4.3 Erosion Control 14
4.4 Sediment Control 15
4.5 Vegetation BMPs 15
4.6 Grading 16
4.7 Roadside Vegetation Maintenance 16
PART 5. LANDINGS **17**
PART 6. WATER CROSSINGS **17**
6.1 General Water Crossing BMPs 18
Figure 3.2 Culvert plugging hazard 18
Figure 3.3 Armored relief dip design 19
6.2 Water Crossing Structures in Type S and Type F Waters 20
6.3 Water Crossing Structures in Type N Waters 20
Figure 3.4 Nomograph for calculating sizes for round corrugated metal culvert pipe on Type N Waters. 25
6.4 Fords 26
Figure 3.5 Ford water crossing 26
PART 7. DRAINAGE STRUCTURES **27**
Table 3.5 Comparison of Drainage Structures 28
7.1 Relief Culverts 28
7.2 Dips 29
Figure 3.6 Diagram of a rolling dip 29
7.3 Water Bars 29
Figure 3.7 Diagram of a water bar 30
7.4 Drainage Diversions 30
Figure 3.8 Diagram of rubber strip diversion structure 31
7.5 Ditches 31
7.6 Energy Dissipaters 31
PART 8. ROAD ABANDONMENT **32**
8.1 Prioritizing Roads for Abandonment 32
8.2 Side Cast and Fill Removal BMPs 32
8.3 Water Crossing Removal BMPs 32

8.4 Drainage BMPs 32
PART 9. ROCK PITS AND QUARRIES.....33
GLOSSARY 34
Figure 3.9 Diagram demonstrating full bench construction. 34
Figure 3.10 Diagram showing the road prism. 35
RESOURCES 36

PART 1. OVERVIEW

Background

Historically, studies have identified forest roads as sources of sediment delivery to streams in Washington's forests. Roads can deliver sediment for a variety of reasons including past practices, neglected maintenance, natural processes, and catastrophic events.

Introduction

This manual provides guidelines to help implement the forest practices road construction and maintenance rules. Correct implementation of current forest practices rules is assumed to minimize runoff water and sediment delivery to typed waters.

Research has demonstrated that well designed and properly maintained roads minimize impacts to public resources and at the same time, reduce operating costs. This manual includes Best Management Practices (BMPs) for forest road location, design, construction, and maintenance (which includes abandonment). The BMPs are grouped into types of activity. For example, ditch construction and maintenance are both under the topic "Ditches."

The listed BMPs will not address every situation nor are all BMPs appropriate for every road. The intent of the BMPs is to provide decision makers with as much flexibility and choice as possible in planning road design, construction, and maintenance activities. If the listed BMPs do not address your situation, you may propose site-specific solutions to the Department of Natural Resources (DNR).

Use of BMPs depends on many factors, including the potential to cause damage to a public resource. For example, timber hauling on a road near a stream may require a higher level of maintenance than a road located away from a stream.

The manual also provides information on Road Maintenance and Abandonment Plans (RMAPs) and the Family Forest Fish Passage Program. All italicized words are in the attached glossary.

PART 2. ROAD MAINTENANCE AND ABANDONMENT PLANNING

2.1 Road Maintenance and Abandonment Plans

Road maintenance and abandonment plans (RMAPs) are ~~only~~ required ~~of~~ for all forest landowners. Large forest landowners must prepare a full RMAP for all of their ownership per WAC~~s~~ 222-24-051 and small forest landowners must follow the RMAP requirements in WAC 222-24-0511. ~~Your RMAP requirements depend on your annual harvest level.~~ Landowners submit RMAPs to the ~~to~~ DNR.

~~All forest~~Forest landowners are responsible for maintaining all of their forest roads to the extent necessary to prevent potential or actual damage to public resources. This includes both forest roads ~~in~~ listed within an RMAP and those forest roads that are exempt from RMAP requirements (80/20 small forest landowners as referenced in WAC 222-24-0511). The type and extent of your RMAP depends on whether you are a **large** or **small** forest landowner. See WAC 222-16-010, for the complete definition of "forest landowner."

Large forest landowners ~~harvest an annual average of~~ are defined in rule as harvesting more than two million board feet of timber from their ~~own~~ forest land in Washington State. ~~Their~~ These RMAP requirements are described in WAC 222-24-051.

- All ~~their~~ large forest landowner forest roads ~~must to be~~were included in an approved RMAP by July 1, 2006.
- Road work in the approved ~~plan must~~RMAP needs to be completed by July 1, 2016 or by the the extension deadline approved by the DNR under WAC 222-24-051 (8).

Small forest landowners ~~harvest~~ (SFL) are defined in rule as harvesting an annual average of two million board feet ~~or less~~ of timber from their ~~own~~ forest land in Washington State. ~~They~~ SFLs have harvested at this level for the past three years and do not plan to exceed this annual average harvest level for the next 10 years~~. Their RMAP requirements are based on the size of their forest land holdings~~, WAC 222-21-010 (13). If a SFL increases their annual timber harvest level over two million board feet, an RMAP will be required for their property

SFL RMAP requirements are based on the size of forest land holdings (WAC 222-24-0511).

- No RMAP is required for 80/20 ~~small forest landowners~~SFL.
- Other ~~small forest landowners~~SFLs are only required to submit a Checklist RMAP with each forest practices application/notification for timber harvest (includes salvage).
- If ~~you are~~ a ~~small forest landowner but have~~SFL submitted an RMAP (other than a Checklist RMAP), ~~you~~ they have the following options:
  - Follow the RMAP schedule.
  - Ask DNR to approve changes to the RMAP schedule.
  - Cancel the RMAP ~~in writing~~by providing written documentation to DNR. Submit ~~a~~ Checklist RMAPs ~~if required~~with all future timber harvest forest practices applications/notifications.

RMAP Review

For large landowner road systems, the departments of Ecology and Fish and Wildlife, affected tribes and interested parties (stakeholders) have the opportunity to review existing approved RMAPs, revised RMAPs prepared for extension requests, annual work plans and schedules, and work accomplishment reports. For efficiency in the review process, early communication between forest landowners and stakeholders about road concerns and priorities can help prepare all parties for the review. These opportunities for review will be offered prior to DNR's decision to approve/ disapprove.

Stakeholders will be notified of changes to RMAPs any time a change occurs.

RMAP Extension

Large forest landowners operating under an RMAP, and small forest landowners who choose to operate under an RMAP, may apply for an extension of their RMAP deadline for a maximum of five years (July 1, 2021). Landowners are encouraged to submit their extension requests as early as possible. RMAP extensions can be requested to within one hundred twenty days prior to the initial RMAP's anniversary date in 2014. Upon receipt of the extension request, stakeholders will have at least forty-five days to review a revised RMAP, see timeline below.

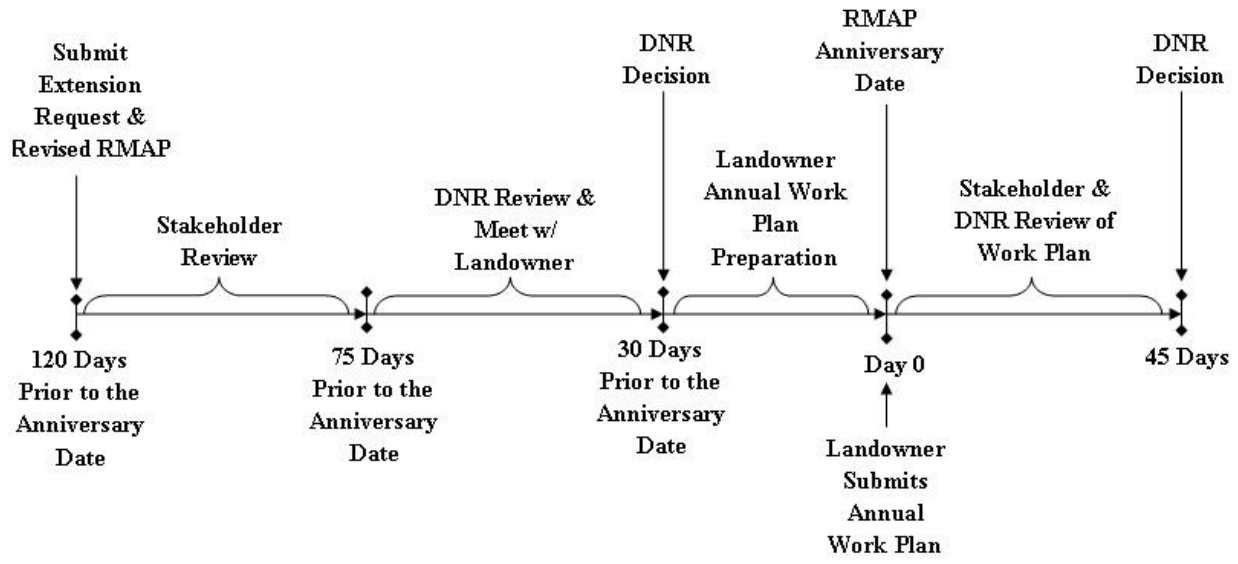

Requests for an extension need to include:

- The length of time for the extension; and
- A revised RMAP.

The revised (RMAP) needs to contain the following information:

1. An adjusted RMAP schedule describing how remaining work will be completed on a generally even-flow basis by the extension deadline. The schedule shows how all remaining work will be prioritized using the worst first principal (how the worst problems will be addressed as the highest priority – "worst first" per WAC 222-24-051(3)(4) and (6)). Scheduled road fixes need to correspond to specific locations shown on the forest landowners' maps.

2. Maps showing the road systems including:
   - An inventory of their existing condition (i.e., meets forests and fish standards, does not meet forests and fish standards, abandoned, or orphaned road); and
   - Scheduled road work to address roads with the highest potential of impacting public resources. Road locations need to correspond to the work listed in the adjusted schedule.

3. Assessment of the remaining fish passage barriers, including a replacement schedule that demonstrates work is being completed consistently on a generally even-flow basis through the remaining performance period. This will avoid planning and completing a disproportionate majority of the work at the end of the extended RMAP timeline.

The following describes specific elements necessary for a revised RMAP:

- Road Maintenance and Abandonment Plan Cover Sheet (https://fortress.wa.gov/dnr/fpars/public/FPAForms.aspx) containing general information including:
  - A work schedule to complete the entire plan within the requested extension performance period.
  - The general strategy that will be used to prioritize work on a generally even-flow basis through the performance period.
  - RMAP boundaries.
  - Plan manager contact information.
  - Road assessment forms.
  - Any comments that help clarify the RMAP.

- Ownership maps – For consistent reporting, use DNR Section or Township Base Maps (or other comparable map(s); or DNR compatible GIS map products). DNR will accept a range of map(s) from 1:12,000 through 1:60,000 scale.

  The following elements need to be included on each map:
  - All forest roads showing:
    - Roads and/or road segments requiring general and storm maintenance work to meet Forest Practices standards per chapter 222-24 WAC and (WAC 222-24-052).
    - Roads and/or road segments requiring work to meet Forest Practices standards:
      - removal of fish passage barriers,
      - replacing/removing undersized water crossing structures,
      - sidecast pullback,
      - road relocation, and
      - cut and fill slope stabilization.
    - Roads and/or road segments proposed for abandonment (WAC 222-24-052(3)).
    - Stream adjacent parallel roads (identify segments) (WAC 222-16-010).
    - Orphaned roads, and specify those with potential resource risks.
  - Type A and B wetlands adjacent to or crossed by roads.
  - Stream locations and water type(s) (existing stream layer).

RMAP coversheets, work scheduling spreadsheets and related forms can be found on DNR's website at https://fortress.wa.gov/dnr/fpars/public/FPAForms.aspx.

Field Assessment and Screening:
An on-the-ground assessment is necessary if a portion of the road system has not been assessed or if it has been rendered inadequate because of major changes that occurred before the RMAP work was complete (e.g., storm damage, landslides or new property acquisition).

The on-the-ground assessment should include, but is not limited to reviewing the following elements associated with each road segment not meeting current forest practices rule standards:

1. Blockages to fish passage
2. Undersized culverts or other water crossing structures on non-fish habitat streams

3. Mass wasting (landslides) from unstable areas that may deliver sediment to typed waters or threaten public resources and/or public safety
4. Sediment delivery to typed waters
5. Stream adjacent parallel roads
6. Hydrologic connectivity (where road drainage intercepts springs, seeps, and other typed water; including water that is routed out of its natural channel or flow pattern)
7. Drainage disconnect (road ditches that drain into streams or wetlands)

Refer to RMAP forms for more detailed guidance in road assessments. The forms are located at https://fortress.wa.gov/dnr/fpars/public/FPAForms.aspx

Prioritizing Road Maintenance Work within a Basin:
After assessing maintenance needs, work prioritization can take place. The priority should be placed on areas with the highest potential to damage public resources. Landowners are encouraged to work with the departments of ecology and fish and wildlife, affected tribes and interested parties on prioritizing their RMAP work; this will facilitate the efficiency of RMAP review.

Work schedules within RMAPs should consider the following based on each landowner's RMAP priorities (not necessarily in this order):

1. Restoration of fish passage beginning with blockages that affect the most fish habitat stream miles above the blockage.

2. Repair or maintenance work to reduce sediment delivery from surface erosion and/or mass wasting.

3. Repair or maintenance work to disconnect road drainage(s) from streams.

4. Repair, maintenance, relocation, or abandonment of stream-adjacent parallel roads with an emphasis on reducing water and sediment delivery from the road to the stream.

5. Repair or maintenance work to reduce hydrologic connectivity (i.e. minimize interruption of surface water drainage, interception of subsurface water, and pirating of water from one basin to another, etc.).

6. Repair or maintenance work which can be undertaken with the maximum operational efficiencies.

Prioritization should address the worst situations first. Considerations should also be made for completion of the most work possible with available landowner funds to achieve the most improvement in resource protection as early as possible in the planning period.

Annual Road Maintenance Accomplishment Reports:
Each year on the anniversary date of the plan's submittal, landowners need to report work accomplishments for the previous year and submit any modifications to existing plans per WAC 222-24-051. In order to meet the requirements in WAC 222-24-051 these reports need to include the following elements:

1. A list of all RMAP work completed during the previous year and include:
   - Map(s) showing the locations of all work completed.
   - Documentation for miles of completed road improvement.
   - Miles of completed road abandonment.
   - Number of fish passage blockages resolved.
   - Approximate number of stream miles of fish use restored.

2. Documentation of all scheduled work within the last planning period that was not completed. The annual RMAP accomplishment report needs to show how this work has been rescheduled for completion.

3. Documentation of any additional information pertaining to work that needs to be added to the plan (e.g., such as purchasing new lands or storm damage to existing road networks that have not been brought up to Forest Practices rules standards).

4. Detailed scheduling information relating to work that is to occur within the next year (i.e., before the next accomplishment report).

5. Any revisions to the overall RMAP caused by unforeseen circumstances that may have altered the long term plan (including any preparation or response to storm events (222-24-051(5)).

6. Documentation of cumulative progress towards achieving the scheduled RMAP goal.

The DNR, in consultation with departments of ecology and fish and wildlife, affected tribes, and other interested parties will review the progress of the RMAP on an annual basis to determine if the RMAP is being implemented as approved. The DNR will notify the landowner within 45 days of receiving the annual work plan of any concerns that may need further work or approval.

RMAP Data

Data is collected from landowner RMAP annual reports, plans and RMAP reviews. RMAP information may be submitted on DNR forms, paper maps, electronic spreadsheet(s), and/or GIS spatial formats to the DNR. The DNR will distribute the data for review to the stakeholders per the format in which it was received. The DNR will make the data available for review by stakeholders. For more information regarding the report and plan content, visit the DNR's site at https://fortress.wa.gov/dnr/fpars/public/FPAForms.aspx.

This data is subsequently administered as described below.

The DNR distributes an RMAP accomplishment report annually to stakeholders and publishes it in the Forest Practices Annual HCP Report. The summary consists of several reporting items that are broken down by region and added together to provide stakeholders with a statewide picture of the RMAP program status. The reporting items for large forest landowners are located on the DNR forms available at https://fortress.wa.gov/dnr/fpars/public/FPAForms.aspx.

Furthermore, the Forest Practices RMAP Status database has been created by the DNR to track large landowners' progress towards meeting RMAP obligations. RMAP stakeholders can use the database to review the work being completed by landowners on their RMAP(s). A year is assigned to each data location communicating when the work is planned or was completed. This database can be represented spatially in GIS. This will allow stakeholders to run limited queries on a watershed basis. This database and its narrative can be found on the DNR's website at https://fortress.wa.gov/dnr/fpars/public/FPAForms.aspx.

RMAP Completion

RMAPs will be considered complete when all elements identified within the RMAP have been accomplished by the landowner and validated by the DNR:

- Assessment and review of landowner accomplishment reports.
- Consultation with the departments of ecology and fish and wildlife, affected tribes and interested parties prior to the DNR issuing a final acceptance of the RMAP.
- DNR will provide, in writing, confirmation to the landowner that the RMAP(s) is complete.
- This written documentation will be distributed to the departments of ecology and fish and wildlife, affected tribes and interested parties.

Upon completion of an RMAP, landowners will be expected to maintain existing roads and construct all new roads per forest practices rules.

2.2 Changes in Ownership

An approved RMAP is a continuing forest land obligation only for large forest landowners per WAC 222-20-055.

If you are a large forest landowner and purchase forest land with an RMAP, you have the following options:

- Follow the RMAP schedule.
- Ask DNR to approve changes to the RMAP schedule.

If you are a **large** forest landowner and purchase forest land without an RMAP, contact DNR for assistance in developing a plan and maintenance schedule.

If you are a **small** forest landowner and purchase land with an RMAP (other than a Checklist RMAP), you have the following options:

- Follow the RMAP schedule.
- Ask DNR to approve changes to the RMAP schedule.
- Ask DNR to cancel the RMAP.

2.3 Family Forest Fish Passage Program

Small forest landowners are eligible for the Family Forest Fish Passage Program. This voluntary cost-share program provides financial assistance for removing *fish passage barriers* and replacing them with fish passable structures. The *fish passage barrier* must be located on forest land and cross a Type S or F Water.

A *fish passage barrier* is determined by the state and is any artificial (human-caused) in-stream structure that impedes the free passage of fish. "Fish" includes all life stages of resident and anadromous fish. Cost share rates range from 75%-100%.

For an application and information, see www.dnr.wa.gov/sflo/fffpp or contact the Small Forest Landowner's Office at any DNR region office.

PART 3. ROAD LOCATION AND DESIGN

(Rules are in WAC 222-24-015, WAC 222-24-020, and WAC 222-24-026.)

The location of a road may have long-term effects on construction and maintenance costs, safety, and public resources. A well located, designed, and constructed road balances current and future needs with construction and maintenance costs. Base the final road location on field verified information, BMPs, and local knowledge.

3.1 Location BMPs

When necessary to cross water, find the optimal water crossings first. See 6.1 General Water Crossing BMPs. Then locate roads to:

- Utilize topographic features such as benches, ridges, and saddles.
- Use natural grade breaks to locate drainage structures. This prevents long continuous ditches.
- Avoid crossing or constructing roads adjacent to wetlands. When wetlands are present, refer to WAC 222-24-015(1) for an ordered list of choices for road location and construction. Recommendations on wetland restoration, enhancement or replacement are in Board Manual Section 9, Guidelines for Wetland Replacement by Substitution or Enhancement.
- Disconnect the road drainage from typed waters.

Reduce risks to public resources by minimizing the amount of roads in the following locations:

- On side slopes greater than 60%.
  - If you plan to construct roads in these areas, you may be required to use *full bench construction* techniques.
- On unstable slopes and landforms. For guidance, see Board Manual Section 16, Guidelines for Evaluating Potentially Unstable Slopes and Landforms.
  - If you plan to construct roads in these areas, you may need to perform additional environmental review (see WAC 222-16-050, Class IV-special).
- In areas with a history of road failures or slides.
  - If you plan to construct roads in these areas, research the factors that contributed to the failures and plan to avoid past road location, construction and maintenance techniques. You may be required to perform additional environmental review (see Board Manual Section 16, Guidelines for Evaluating Potentially Unstable Slopes and Landforms and WAC 222-16-050, Class IV-special).
- Within 200 feet of typed waters.
  - Note: New stream adjacent parallel roads require an ID team.
- In or near seeps and springs.
  - If you plan to construct roads through seeps and springs, maintain the natural flow patterns around them. The flow pattern often has wetland indicator plants and soils.

3.2 Design BMPs

Once you have selected a road location, design the road to minimize sediment delivery to typed waters by:

- Including adequate drainage structures for anticipated surface and intercepted sub-surface flow.
- Ensuring the sub-grade and surface can support log and rock haul during the planned season of road use.
- Not constructing sunken roads. These are roads lower than the surrounding ground level, and do not drain properly. Sunken roads occur on gently sloped land where cut and fill is unnecessary. In these locations, it may be necessary to build up the road surface so that water drains away from the road surface.
- Incorporating grade breaks to avoid long, continuous road grades.

Design the road shape (crowned, inslope, outslope) to support the anticipated haul of timber, rock, etc. Figure 3.1 shows cross section views of road sub-grades by type of road shape. Table 3.1 offers a comparison chart to help determine the best road design for your location.

Crowned

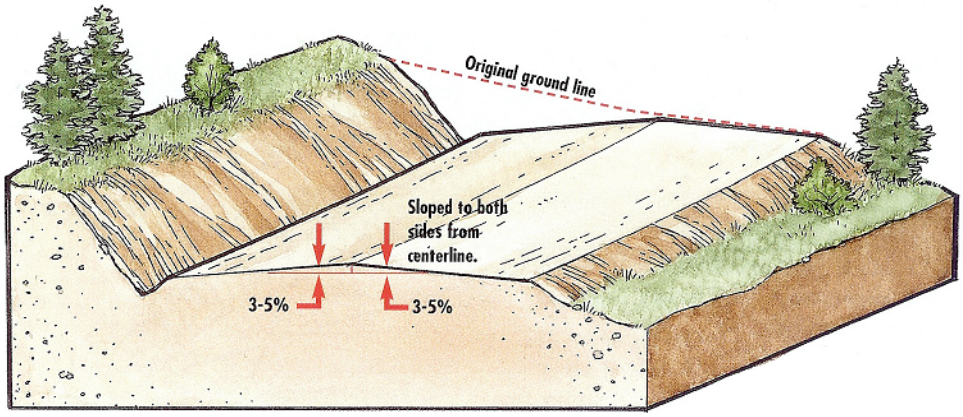

Inslope

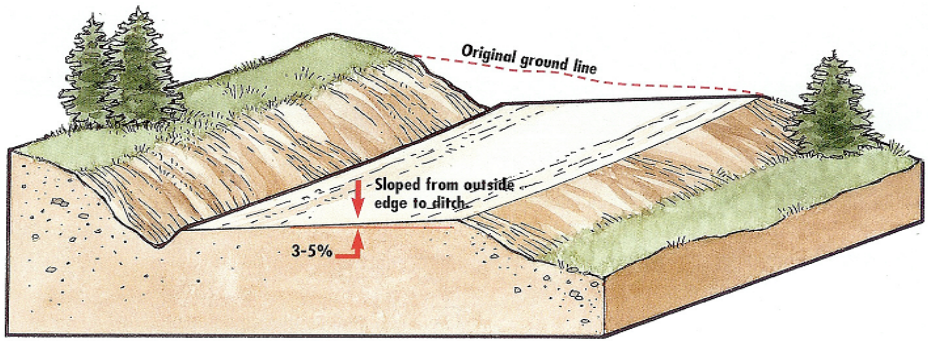

Outslope

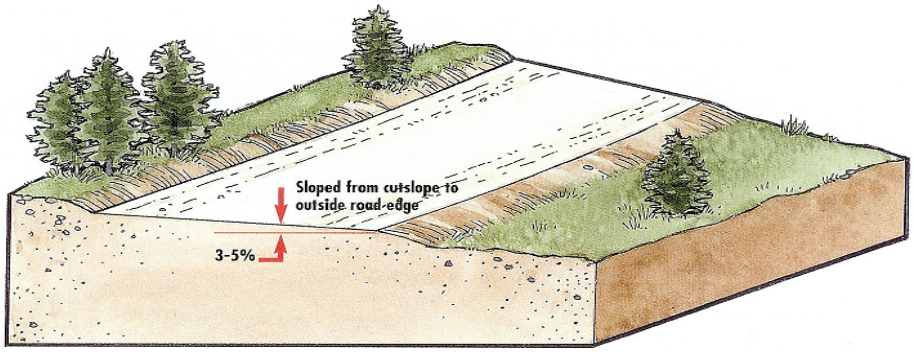

Figure 3.1 Road shape designs

Table 3.1 Comparison Chart for Road Shape

	Inslope	**Outslope**	**Crown**
Road surface shape	Drains towards the **cut** slope using the road or ditches.	Drains towards the **fill** slope using dips, not ditches.	Drains **both** directions with high point in center of road.
Construction requirements	Requires more excavation and clearing.	Requires less excavation and clearing.	Will require excavation and clearing quantities between inslope and outslope.
Maintenance requirements	Road surface Ditch and relief structures	Road surface Dips Fill slopes – vegetation or stabilization	Road surface Ditch and relief structures Fill slopes – vegetation or stabilization
Erosion concerns	Road surface Ditches At relief culverts and outlets	Road surface Fill slope Dips and dip outlets	Road surface Ditches At relief culverts and outlets Fill slopes
Where to use	When keeping runoff water in the ditch is critical to controlling sediment delivery. Unstable or erodible fill slopes Steep grades When hauling in ice or snow conditions	Rocky or well drained soils Where unable to maintain ditches Stable fill slopes On temporary or spur roads that are less than 8% grade.	Unstable or erodible fill slopes Steep grades When hauling in ice or snow conditions High traffic roads
Where not to use	Where ditches and relief culverts have high probability of clogging. Where ditches cannot be constructed.	Steep road grades High traffic roads Unstable fill slopes Where safety concerns exist, such as for use during ice or snow.	In areas, where outsloping the road is adequate. Temporary roads

PART 4. ROAD CONSTRUCTION AND MAINTENANCE

Road construction techniques are important to prevent potential and actual damage to public resources.

4.1 General Construction BMPs

(Rules are in WAC 222-24-030)

- Provide road construction operators with well-marked road locations, readable road design information, and clear instructions.
- Supervise road construction operators to:
  - Ensure road width and cut depths match design specifications.
  - Respond to unanticipated circumstances.
- Construct roads when moisture and soil conditions are not likely to result in excessive erosion and/or soil movement.
- Minimize the area of soil disturbance during construction.
- Place all clearing debris (such as tree limbs, stumps and brush) outside the road prism.
- For roads near typed water, place all clearing debris on the downhill side of the road at the toe of the road fill. This can trap sediment.
- New, non-compacted roads may need time to settle (several weeks or more) before rock or timber haul.
- Place a *geotextile fabric* over an inferior sub-grade before applying the surfacing material. This spreads vehicle load over the entire sub-grade and helps prevent the surfacing rock from sinking into the sub-grade soil.
- When crossing wetlands, follow the ordered list of choices for road location and construction in WAC 222-24-015(1). Recommendations on wetland restoration, enhancement or replacement are in Board Manual Section 9, Guidelines for Wetland Replacement by Substitution or Enhancement.

4.2 Compaction and Stabilization

(Rules are in WAC 222-24-030 and WAC 222-24-035.)

General Compaction BMPs

Compaction of the embankment, road sub-grade and landings ensures a solid earthen structure.

- Compacting the embankment reduces potential failure and surface erosion.
- Compacting the sub-grade extends the life of the running surface. It also reduces sediment runoff from the pumping of fine sediments upward into the road ballast and surfacing.
- Compacting the road surface and landings can shorten the settling time, extend rock surface life, and reduce sediment production during rainy weather.

For best compaction results:

- Place soil in 1 to 2 foot layers and run excavation equipment over the entire width of the lifts.
- Avoid incorporating organic material into any area to be compacted.
- Compact during optimal soil moisture conditions. Determine this through observation and experience with different soil types. In soils with silt or clay, ideal soil moisture content is when you can squeeze the soil into a cohesive ball without having water form on the outside.

Special Case BMPs

In some instances, apply these additional techniques to enhance the sub-grade and road surface:

- On heavily used roads or where rock is expensive, use a roller to compact the sub-grade and surfacing. This extends the life of the road by:
  - Reducing the water intrusion.
  - Reducing the wear.
  - Improving the sub-grade's durability.
  - Maintaining the crown.
  - Enhancing the surfacing.

For this technique:

- Place surfacing in layers before compacting.
- Compact in several passes depending on the layer thickness. When there is no visible deformation of the surface, compaction is complete.
- If the sub-grade or surface rock is dry, spray on water or use a roller with a built in spray bar.
- If using a vibratory roller:
  - Place surfacing in 4 to 6 inch layers before compacting.
  - Compact until a sheen of water and fines rise to the surface.
- Use hard, angular rock that has a full range of fragments to tightly pack the road surfacing.

Stabilization BMPs

Stabilize all disturbed soils that have a potential to deliver sediment to typed waters. Stabilization methods include establishing vegetation and covering exposed soils with *bio-matting*, straw, tree boughs, or hydro mulching.

Waste soil (spoil) deposit areas should be located where material will not enter any typed waters if erosion or failure occurs. An area with stable, shallow slope topography is best suited for a spoil area. Compaction of spoil deposit areas reduces potential embankment failures, surface erosion, and helps fit material into waste areas. Apply the compaction techniques to spoil deposit areas:

- For best results, handle spoils when they are dry. Handling super-saturated material may require sediment controls (e. g., *silt fence*, berms, straw bales).
- Seed or plant disturbed soils with non-invasive plant species (native plants are preferred). Consider adding fertilizer and/or mulch if the site has poor nutrient quality and/or organic content.

4.3 Erosion Control

Erosion control measures are necessary if exposed soils can deliver sediment to typed waters. The key to controlling sediment is to control erosion. The best way to control erosion is to prevent it by:

- Covering all exposed soils with non-invasive plant species as soon as possible (native plants are preferred). Until the area can be vegetated, apply straw, logging slash or *fiber mats* to the exposed soil to prevent erosion from raindrop splash. This not only protects and holds soil particles from the erosive effects of rainfall, it also prevents the spread of noxious weeds.
- Scheduling construction during dry soil conditions.

4.4 Sediment Control

The goal of sediment control is to create a stable, dispersed, non-erosive drainage pattern. This minimizes potential or actual sediment delivery to typed waters. Where needed, sediment control BMPs include:

- Excavating *dead sumps* to intercept and settle sediment-laden water.
- Building *sediment traps* in ditch lines to create small sediment settling pools. Make *sediment traps* from rock, *straw wattles*, or sand filled bags. Orient the traps so they dip in the center and curve slightly. This keeps the flow centered in the ditch.
- Installing *slash filter windrows* to intercept sediment at the toe of fills over water crossings.
- Installing a secondary ditch or a raised berm over water crossings.
- Placing *straw wattles*, *silt fencing*, or *slash filter windrows* perpendicular to the hill slope to slow down and disperse water flow.

Use *sediment traps, silt fences* or *dead sumps* only as temporary or remedial measures because they require continuous maintenance. Install temporary *sediment traps* in any of the following situations:

- If erosion or sediment is likely to deliver to typed waters.
- If roads are built of erosive, native soils.
- If cut and fill slopes are difficult to vegetate.
- In armored or grass seeded ditches using staked straw bales. Note: Use bales as temporary sediment filters, not as *ditch dams.*

BMPs for roads within 200 feet of typed water

Apply one or more of the following techniques on roads built of erosive native soils, or are likely to have ditch erosion, or have cut or fill slopes that are difficult to vegetate:

- Grass seeding.
- Armoring ditches.
- Constructing catch basins.
- Constructing temporary *sediment traps.*
- Rocking road surfaces near water crossings.

4.5 Vegetation BMPs

Consult with the Natural Resource Conservation Service, a county extension office or a State resource agency (DNR, Ecology, Agriculture) to determine the type of seeds and/or plants to use. Factors to consider are:

- Type of soils and soil conditions, including moisture content and degree of compaction.
- Available seed/plant sources (native plants are preferred).
- Costs and methods of seeding or planting.
- Avoiding invasive plant species.
- Matching the time of year the site is accessible with the appropriate planting of seed and/or plants.
- Topographic aspect, north or south facing slopes.

When applying grass seed to exposed soils:

- Consider using *straw blankets* or broken-up straw bales if soil moisture is low. Apply straw 3-6 inches thick.

- Seed during times of year that will allow germination without additional site visits to apply water.

4.6 Grading

To protect the sub-grade, grade a road before the surface reaches severe stages of pothole formation, wash boarding, or it begins to pool water. Grade only as needed to maintain the surface drainage and keep the sub-grade from becoming saturated.

Grading BMPs

- Determine the cause of potholes and wash boarding and fix the problem. The problem is usually standing water.
  - Cut out potholes and wash boarding. Pull road surfacing back onto running surface. This reduces water penetration and sub-grade saturation. Long-term solutions include restoring the road crown, adding rock, adding culverts, and ditching to reduce water in the road prism.
- Remove berms except those needed to carry water away from unstable slopes and/or typed waters.
- Compacting the graded surface with a roller will:
  - Seal the surface and retain fines.
  - Reduce potholes.
  - Reduce wash boarding.

Avoid the following practices:

- Unnecessary removal of all vegetation in functioning ditches.
- Undercutting the fill or cut slopes.
- Pushing sediment over steep slopes above typed waters.
- Burying vegetation and logging debris into the road running surface or sub-grade. (Decomposition of this material will leave holes in the road surface. Traffic on this surface may cause sediment delivery to typed waters.)

4.7 Roadside Vegetation Maintenance

The purpose of roadside vegetation maintenance is to increase visibility, improve safety, control noxious weeds, and to keep roots from interfering with the roadbed and ditches. Methods include chemical application, hand brushing, and mechanical brushing.

Roadside chemical application BMPs

- Find and mark the location of all surface waters and wetland management zones immediately before applying roadside spray.
- Mix chemicals in upland areas away from all typed waters and Type A and B Wetlands.
- Prevent chemicals from entering any surface waters and Type A and B Wetlands and their buffers.
- Follow all label instructions.
  - Know and follow regulations regarding chemical storage, handling, application, and disposal.
  - Develop a contingency plan for spills, including clean-up procedures and proper notification. Keep this plan on site during operations.

- Apply chemicals during optimum weather conditions and optimum times for control of target vegetation. See Board Manual Section 12, Guidance for Application of Forest Chemicals.

Mechanical Brushing BMPs

- Remove brush to a width that allows proper maintenance functions such as grading, trimming shoulders, pulling ditches, and cleaning headwalls.
- Upon completion, remove all debris generated during mechanical brushing that will interfere with proper function of ditches or culverts.

PART 5. LANDINGS

WAC 222-24-035(1) states, "Locate landings to prevent potential or actual damage to public resources. Avoid excessive excavation and filling. Landings shall not be located within natural drainage channels, channel migration zones, RMZ core and inner zones, Type Np RMZs, sensitive sites, equipment limitation zones, and Type A or B Wetlands or their wetland management zones."

Landings can deliver sediment through runoff or mass failures (landslides). Reduce costs and risks to public resources by minimizing the number of landings on steep erosive slopes or large fills.

Utilize the road BMPs in Part 3 Road Location and Design and Part 4 Road Construction and Maintenance when locating, designing, and constructing landings.

General landing BMPs

- Use existing landings if properly located.
- Design landings to provide for drainage:
  - Slope landings 2-5%.
  - Install cross drains, ditch-outs, or other drainage structures to route runoff onto the forest floor away from typed waters. See Part 7 Drainage Structures.
  - Compact if appropriate. See 4.2 Compaction and Stabilization.
- Construct when moisture and soil conditions are not likely to result in excessive erosion and/or soil movement.
- After completion of harvest:
  - Pull back fill material and woody debris on steep slopes that have the potential to damage a public resource. Place debris in a stable location.
  - Install self-maintaining drainage structures. See Part 7 Drainage Structures.

PART 6. WATER CROSSINGS

(Rules are in WAC 222-24-040.)

Water crossing structures are culverts, bridges, and fords. All of these structures can contribute sediment and negatively affect water quality and fish habitat. Installing or replacing water crossings usually requires a completed Forest Practices Application/ Notification (FPA/N) and may require a Hydraulic Project Approval (HPA) from Washington Department of Fish and Wildlife (WDFW).

6.1 General Water Crossing BMPs

Minimizing the number of water crossings in the following locations will reduce road costs and risks to water quality and other public resources:

- In areas requiring steep road approaches.
- Across braided stream channels.
- On flat stream gradients immediately downstream of steep stream gradients. (These areas are susceptible to high sediment deposition.)
- In areas requiring deep fills.
- Immediately downstream of unstable slopes or landforms (see Board Manual Section 16, Guidelines for Evaluating Potentially Unstable Slopes and Landforms).

Figure 3.2 provides guidance for culvert design and installation that will reduce potential catastrophic failures due to debris (wood and sediment) blockages.

Have a headwater depth to culvert diameter (HW/D) ratio of 0.9 or less when using native soils for the fill.

Match the culvert width to the natural channel to reduce ponding. Do not widen the channel at the inlet. This will help keep woody debris oriented to pass through culvert.

Match the culvert to the channel slope and elevation. This avoids pooling of the stream above the culvert.

Align culvert with the stream channel.

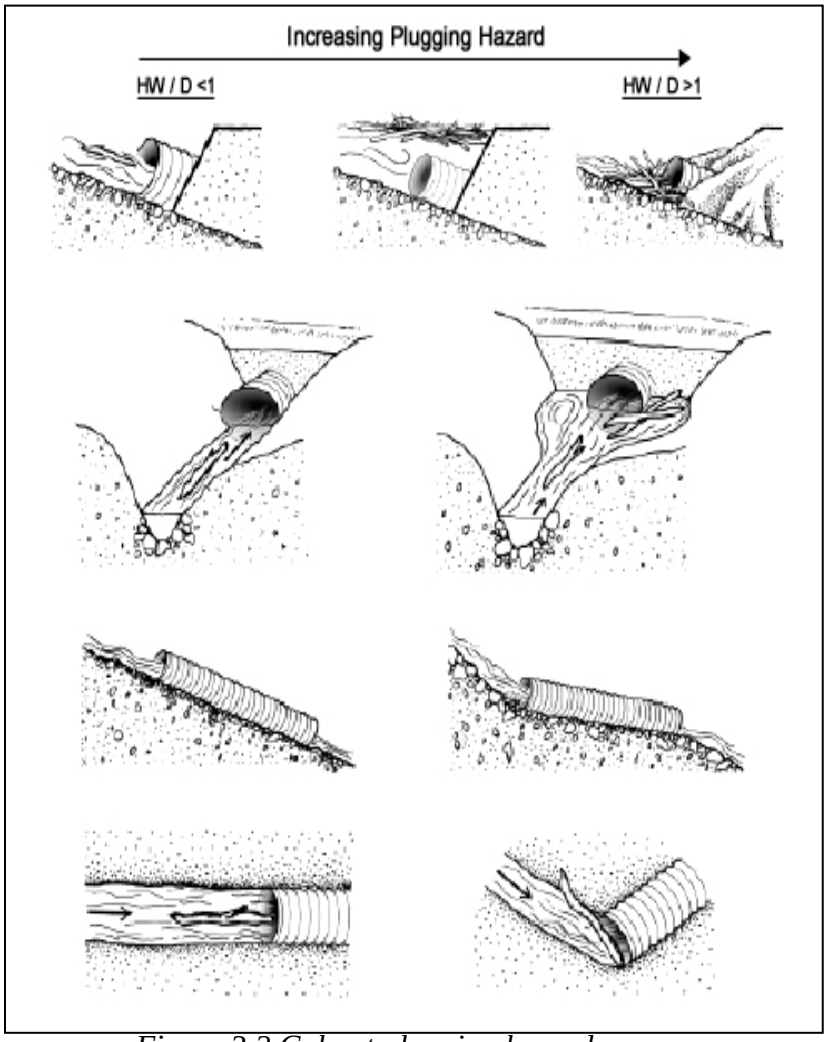

Figure 3.2 Culvert plugging hazard

Deeper fills and/or streams with greater debris transport potential BMPs

Steeper gradient streams often require deeper fills over the crossing structure and have increased amounts of woody debris. In areas where water can come over the road, select the BMPs or other measures from the following list that best fit the local conditions:

- Construct a dip on the fill over the stream crossing structure. This reduces fill erosion potential and improves resistance to road failures resulting from high water flows and debris. Use coarse material, compact the fill and armor with large rock.
- Dip the road grade and armor the fill to direct water onto stable, vegetated ground within the natural drainage (Figure 3.3).
- Outslope the road at the crossing.
- Construct an armored spillway at the intersection of the stream's gorge wall and the water-crossing fill.
- Place large riprap on the upstream facing fill and at the dip on the downstream facing fill.
- Install oversized inlets (bell-shaped inlet structures) or *miter* the culvert inlet to improve flow characteristics and to help orient debris.

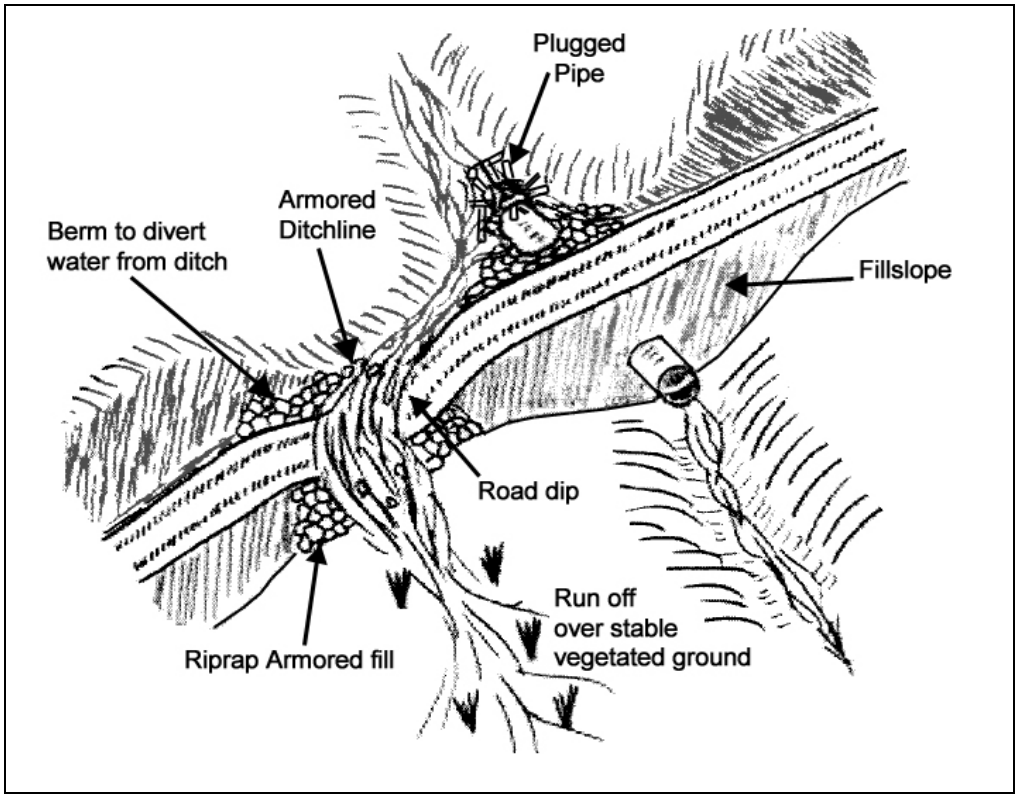

Figure 3.3 Armored relief dip design

<u>Consider increasing the size of crossing structures when</u>**:**

- The crossing is in the rain-on-snow zone.
- The stream contains large amounts of mobile debris (wood, gravel).
- The crossing is inaccessible during winter.
- The crossing requires deep fills.
- Crossing a flat, broad area with poorly defined channels.
- You are considering installing a new culvert with a diameter equal to or less than ¾ of the active channel width.

Water crossing construction BMPs

- Cover tops of culverts with at least 12 inches of fill, or to a depth of ½ the culvert diameter, whichever is greater. This minimizes damage to culverts during road maintenance. It also distributes the weight of passing vehicles, preventing culverts from crushing.
- Prevent stream flow erosion by sizing culverts adequately. Placement of riprap around the inlet and/or outlet of a culvert may also prevent erosion.
- For natural surface roads, apply surface rock at culvert approaches.
- In areas where beavers are present, consult WDFW.

Water crossing maintenance BMPs

Inspect all water crossing structures regularly and after storm events to ensure proper function. The following may indicate the need for maintenance or replacement:

- Stream flows regularly over the road.
- Stream flows diverted from the culvert inlet into the ditch. Look for severe erosion in the ditch located downhill from the crossing.
- Stream flows diverted from the culvert inlet into another basin.
- Streambed material accumulations at the culvert inlet.
- Down-cut channel bottoms and eroded stream banks immediately downstream of the culvert (outlet scour/drop).
- Erosion of the fill located above the culvert inlet.
- Crushed or dented culvert inlets.

6.2 Water Crossing Structures in Type S and Type F Waters

The installation of water crossing structures in Type S and F Waters is regulated by DNR through the FPA/N and WDFW through the Hydraulic Project Approval (HPA). You can apply for both permits with the FPA/N. Water crossing structures in fish waters should allow for fish passage. Fish includes all life stages of resident and anadromous fish. Before designing water crossings, verify the water type with DNR. Information on crossing structures (Design of Road Culverts for Fish Passage) is located at http://wdfw.wa.gov/hab/ahg. Information on HPAs and design criteria is at http://wdfw.wa.gov/hab/hpapage.htm.

NOTE: Small forest landowners may be eligible for a state cost share program to help pay for fixing *fish passage barriers.* See 2.3 Family Forest Fish Passage Program. Visit this website: www.dnr.wa.gov/sflo/fffpp or contact any DNR region office for more information.

6.3 Water Crossing Structures in Type N Waters

(Rules are in WAC 222-24-040.)

The first step in designing a Type N Water crossing structure is to verify the water type with the DNR. Then design your water crossing structure. Crossings need to be large enough to accommodate the 100-year flood with consideration for the passage of debris.
This section includes three methods to determine culvert sizing, any one of which can be used. See Table 3.2.

Method A (Sizing Table Method) uses field-verified bankfull width and average bankfull depth and Table 3.3 to determine the diameter of the culvert. You may need additional size to accommodate debris if the culvert diameter size is less than ¾ the active channel width.

Method B (Bankfull Width Method) uses field-verified bankfull width at the stream crossing to determine the diameter of the culvert.

Method C (Hydraulic Design Method) is a hydraulic-based crossing design method that uses estimated stream flows. The size of the culvert is based on local 100-year flood flow calculations and the nomograph in Figure 3.4. Use local knowledge to predict additional culvert sizing to consider the passage of woody debris.

Table 3.2 Three methods to size Type N Water culverts

	Method A **Sizing Table**	**Method B** **Bankfull Width**	**Method C** **Hydraulic Design**
Summary	Enter bankfull width and average bankfull depth into the culvert sizing table (Table 3.3).	Choose culvert diameter equal to or greater than bankfull width.	Calculate 100-year flow, determine culvert size using nomograph (Figure 3.4), and account for debris.
Complexity	Medium/Low	Low	High
Data Required	Measured bankfull width and average bankfull depth.	Measured bankfull width only.	100-yr flow (various methods and data requirements).
Analysis Required	Table 3.3	None	Peak flow calculation, use of nomograph (Figure 3.4).
Does Method provide for passage of debris?	Somewhat, except where culvert size is much smaller than bankfull width.	Yes	No– needs additional consideration.
Where to use	Where bankfull width and depth is easily determined. Where basin area and/or hydrology are uncertain.	When simplicity is required. Where bankfull width is clear, but depth uncertain. Where abundant mobile debris is present at the site.	Where hydraulic expertise is available. Where site specific design and/or a non-round culvert are desired. Where bankfull width and depth is difficult to determine.

Table 3.3 Method A, culvert sizing table for Type N Waters

Bankfull width (BFW) in Feet	**Average Bankfull Depth in Inches**											
	3	6	9	12	15	18	21	24	27	30	33	36
1	*15	*18	24	30	--	--	--	--	--	--	--	
2	24	30	30	36	42	42	48	48	--	--	--	B
3	30	36	42	48	48	48	54	54	54	60	60	60
4	30	42	48	54	54	54	60	60	66	66	72	72
5	36	48	54	54	60	60	66	66	72	72	78	78
6	36	48	54	60	66	66	72	72	78	78	84	84
7	42	54	60	66	72	72	78	78	84	84	90	90
8	42	60	66	72	78	78	84	84	84	90	90	90
9	48	60	66	78	78	84	84	90	90	90	96	96
10	54	66	72	78	84	84	90	90	96	96	96	--
11	60	66	72	84	84	90	90	96	96	--	--	--
12	66	72	78	84	90	90	96	96	--	--	--	--
13	66	78	78	90	90	96	--	--	--	--	--	--
14	72	78	84	90	96	96	--	--	--	--	--	--
15	78	84	90	96	96	--	--	--	--	--	--	--
16	78	84	90	96	--	--	--	--	--	--	--	--
17	84	90	96	--	--	--	--	--	--	--	--	--
18	84	90	96	--	--	--	--	--	--	--	--	--
19	90	96	--	--	--	--	--	--	--	--	--	--
20	96	96	--	--	--	--	--	--	--	--	--	--

* See WAC 222-24-040(3) for details relating to size restrictions when installing culverts.

<u>Method A (Sizing Table Method)</u>

Step 1: Verify the stream is Type N Water and then determine the bankfull width and average bankfull depth using methods shown in Board Manual Section 2, Standard Methods for Identifying Bankfull Channel Features and Channel Migration Zones.

Step 2: See the culvert sizing table (Table 3.3) to determine the diameter of the culvert. Consult with DNR for culvert diameters larger than 96 inches. For culvert sizes in the shaded areas of chart, it is recommended to use bridges, pipe arches, or open bottom culverts.

<u>Method B (Bankfull Width Method)</u>

Step 1: Verify the stream is a Type N Water. Measure the bankfull width in the field using the methods shown in Board Manual Section 2, Standard Methods for Identifying Bankfull Channel Features and Channel Migration Zones.

Step 2: Size the culvert diameter no smaller than bankfull width. *Note*: *This method may not be possible in areas that are difficult to accurately measure bankfull width.*

Method C (Hydraulic Design Method)

Method C is a hydraulic-based crossing design method that uses an estimate of stream flow for a 100-year flood to size culverts based on a nomograph. Figure 3.4 is a nomograph for calculating sizes for round corrugated metal culvert pipes on Type N Waters.

Limitations to the use of Method C:

- Hydraulic design method assumes there is culvert inlet control. This is a condition where the hydraulic capacity of the culvert is limited by the inlet configuration. This generally occurs in culverts steeper than 2% with unrestricted outflow.
- Flow measurements of past 100-year flood events may be unavailable.
- Estimated 100-year flow volumes may be hard to predict because of rain-on-snow events and inaccurate calculations of basin size.

Step 1: Verify the stream is Type N Water. Then determine the flow volume of the 100-year flood event (q value on the nomograph in Figure 3.4) by:

- Using stream flow records from gauged streams.
- Estimating the 100-year flood event. Table 3.4 lists three methods to estimate stream flows for 100-year flood events.

Step 2: Use the nomograph in Figure 3.4 to determine the culvert diameter:

- Select culvert entrance type (armored headwall, mitered to slope, projecting).
- Select maximum headwater to culvert diameter ratio (HW/D). Do not exceed 0.9 when using native soils for the fill. This will ensure performance without reliance on hydraulic pressure to pass storm events.
- Project a line from the Entrance type bar through the Water Discharge bar (q) to arrive at a point on the Culvert Diameter bar (D).
- Round up to the nearest culvert diameter listed.
- Consider adding additional size to the culvert if debris is present in the stream.

Table 3.4 Three methods to estimate the 100-year flood event.

METHOD	COMMENTS
Regression Equations Method Follow instructions at http://wa.water.usgs.gov/pubs/wrir/flood_freq/ Further information may be found at http://water.usgs.gov/osw/streamstats	Easy to use web-based method. Uses a prediction equation with a standard error of 37% to 77%. Best used for basins greater than 50 acres. Developed using lower elevation stream flow gauge stations that measured larger basin areas typical in forest culvert design.
Flow Transference Method Follow instructions at http://wa.water.usgs.gov/pubs/wrir/flood_freq/	Useful method when water-crossing structure is in or near a gauged basin. Transfers in-stream gauge station information to an un-gauged drainage area.
Rational Method Follow instructions at http://www.wsdot.wa.gov/eesc/design/hydraulics/downloads.htm	Uses rainfall intensity maps or equations to calculate flow. (These maps may be difficult to obtain for forested basins.) Maps do not show flow from rain-on-snow events. **Do not use on drainage basins larger than 200 acres.**

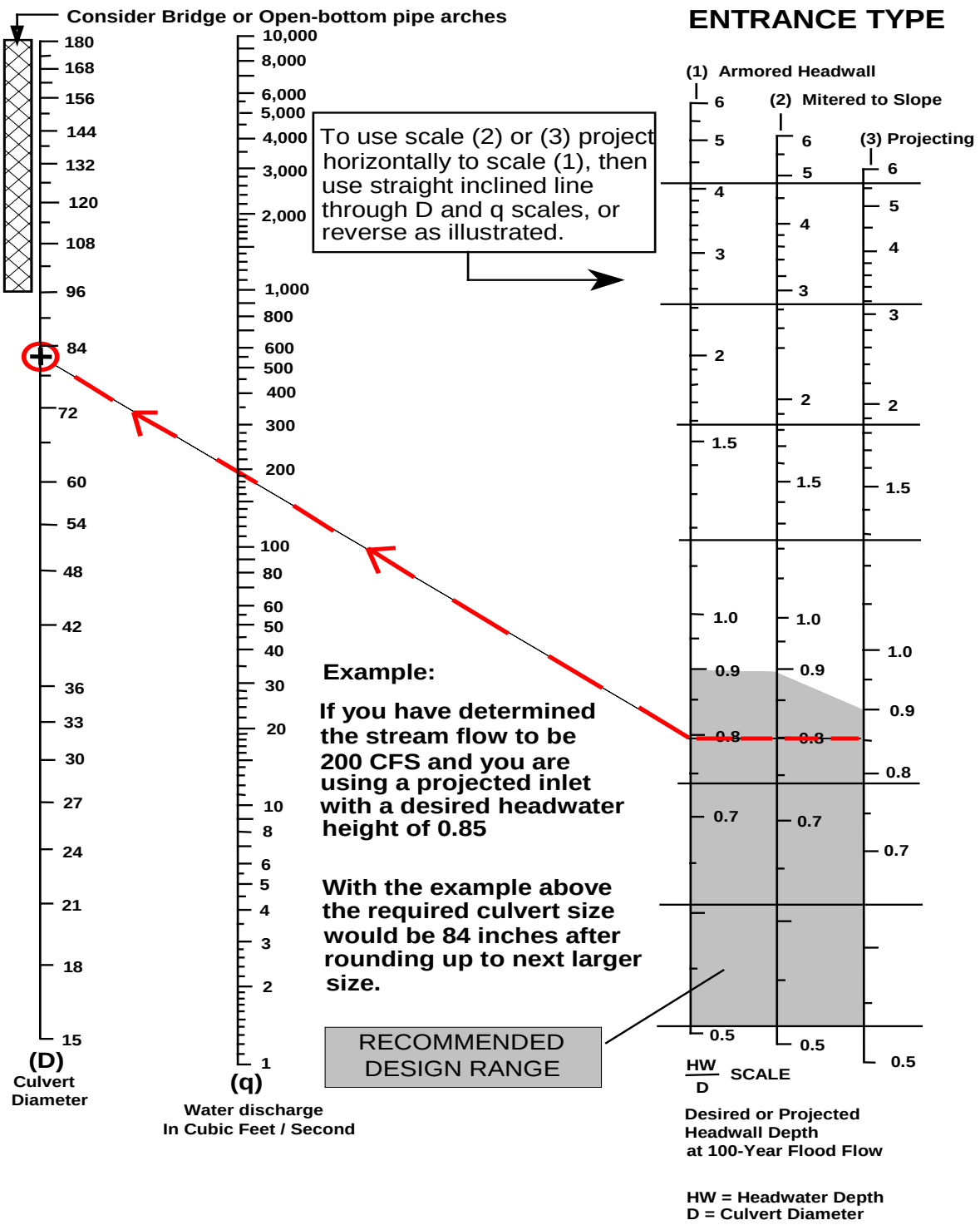

Figure 3.4 Nomograph for calculating sizes for round corrugated metal culvert pipe on ***Type N Waters****.*

6.4 Fords

You may use properly constructed and maintained fords in Type Np and Ns Waters. See WAC 222-24-040(5).

Fords are a type of water crossing where vehicles drive directly through streams (Figure 3.5). They have a high potential to generate and deliver sediment. Therefore, they are only appropriate to use during periods of no or low stream flow. If flow conditions change, a ford crossing may no longer be appropriate.

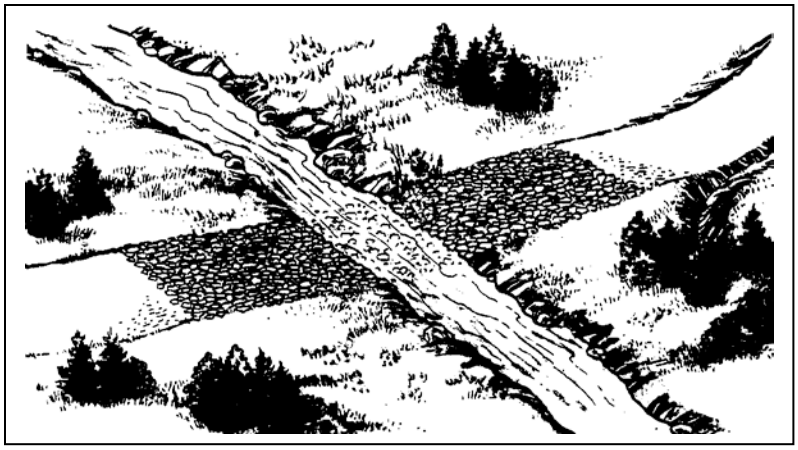

Figure 3.5 Ford water crossing

Fords may be suitable in the following circumstances:

- Minimal vehicle traffic.
- In sites where access limits regular maintenance.
- Variable stream widths exist from frequent landslides, debris flows, or ice flows originating upstream.
- When culverts or bridges are not an option because:
  - Crossing is too difficult to maintain.
  - High debris loading is present in stream channel.

Construction BMPs

- Fit the ford to the conditions on site (e.g., stream substrate and stream bank stability, stream width, depth and flow volume, lateral and vertical channel stability, flood frequency, debris loading).
- If streambed does not have a firm rock or gravel base, install stabilizing material. Use reinforced concrete planks, crushed rock, riprap or rubber mats.
- Make sure equipment is in good working condition and doesn't leak oil.
- Install ditch-outs or water bars on each side of the approaches to divert water away from the stream.
- Control erosion and sediment. See 4.3 Erosion Control.
- Construct the ford so that you can maintain it.
- Construct temporary fords to facilitate abandonment and site rehabilitation.

Maintenance BMPs

Streambeds are part of a dynamic system where storm events frequently change the streambed and stream banks. Fords should not require maintenance after every such event. If frequent or extensive maintenance is required, re-evaluate the use of the ford.

Maintain fords to:

- Keep road approach ditch-outs and water bars functioning.
- Control stream bank erosion. See 4.3 Erosion Control.
- Eliminate multiple approaches.

PART 7. DRAINAGE STRUCTURES

Drainage structures include relief culverts, dips, water bars, diversions, ditch-outs, and ditches. Drainage structures divert water and sediment from the road to the forest floor. They also disconnect road drainage from typed waters or Type A and B Wetlands. The frequency of drainage structures depends on several factors, such as:

- Road grade.
- Surface material.
- Elevation.
- Expected rainfall.
- Soil type.
- Road shape (inslope, outslope, crowned).
- Topographic opportunities for road drainage.
- Location of existing and/or planned drainage structures.
- Opportunity created by the road configuration.
- Local experience.

Install drainage structures in the following locations and order of priority:

1. As close to the stream as possible, to accomplish the following:
   - Limit the distance between the last drainage structure and water crossing structure.
   - Drain away from unstable hill slopes and/or erodible soils.
   - Allow outflow to disperse and filter sediment away from the stream.
2. In natural drainage areas of seeps and springs. If unable to install a drainage structure in the natural drainage area, divert and transport seep or spring water in a ditch for less than 100 feet to the nearest drainage structure.
3. To prevent diverting water from one basin to another.
4. At the low point on the road profile (including the sag point of vertical curves).

You may need to install additional drainage structures where:

- Ditch water delivers sediment to typed waters.
- Ditch scour, road surface erosion, or outlet erosion is occurring from high ditch flow.
- Ditch flow exceeds the capacity of the culvert.

Table 3.5 compares the construction costs, maintenance needs, and appropriate uses of relief culverts, dips, and water bars.

Table 3.5 Comparison of Drainage Structures

	Relief Culverts	**Dips**	**Water bar**
Construction costs	Highest	Medium	Lowest
Maintenance	Medium Needs frequent inspection and cleaning.	Lowest Needs occasional repair or reshaping.	Highest Needs frequent cleaning, reshaping and replacement.
When to use	On steep road grades. On high traffic roads. At the low point of the sag of vertical curves or dips.	On low traffic roads. On outsloped roads. To back up culverts. On dry sites and native surfaced roads.	On low traffic roads. On abandoned roads. To back up culverts. To winterize high traffic roads.
When not to use	On difficult to maintain roads. On seasonal roads. Below unstable or raveling cut slopes.	On steep grades (>12 %). On curves. On high traffic roads.	On high traffic roads.

7.1 Relief Culverts

Relief culverts divert road and ditch water onto the forest floor. Improper location of relief culverts may result in significant road-related resource damage. Overloading a site with drainage water can result in soil saturation and may cause overland flow, gullying and slope instability.

Installation BMPs

- Where practical, place the culvert on the natural slope of the land with the low end of the culvert at least 2 inches lower than the upper end. When impractical, keep the culvert grade at least 2% higher than the ditch grade.
- Skew the culvert so it directs water 30 to 45 degrees from perpendicular to road centerline. No skew is necessary on roads less than 3% grade or at a low point on the road profile.
- Anchor the culvert by packing fill material around it.
- Cover tops of culverts with 12 inches of fill or ½ the culvert's diameter whichever is greater. (This minimizes damage from vehicles by preventing the culvert from crushing.)
- Install energy dissipaters such as flumes and down spouts on slopes greater than 60% or where the outfall drains onto fill or other erosive material.

Maintenance BMPs

- Inspect and clean culverts routinely and after storm events.
- Add relief culverts when you identify problems. These include springs, seeps, low spots in ditch lines, and areas where ditch line erosion is occurring.
- Mark hidden relief culverts with posts so heavy equipment operators can see and protect them.
- Remove brush from around inlets and outlets to see problems and reduce the risk of blockage.

7.2 Dips

Dips are long, shallow road surface drainage structures that provide cross drainage on insloped road sections (Figure 3.6).

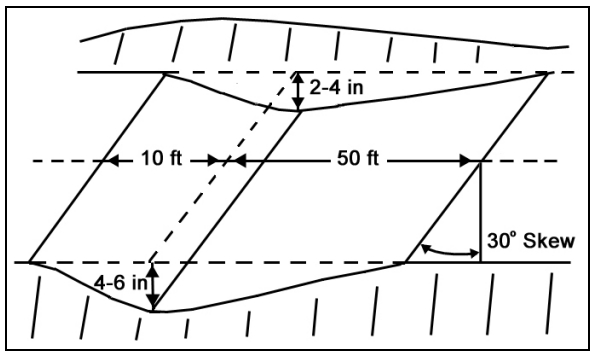

Figure 3.6 Diagram of a rolling dip

Road grades from 12% to 15% are the upper limits for dips because:

- If the dip becomes lower than the outfall it will not drain properly, impeding traffic and causing ruts and sedimentation.
- Truck frames can twist during passage over dips on steeper slopes.

Construct dips:

- To provide access for road maintenance and land management activities. When the dip is:
  - Short in length and traffic includes trucks with long frames, orient the dip perpendicular to the direction of traffic.
  - On steep road grades, skew the dip 30 degrees from perpendicular to provide drainage.
- With rock armoring on erosive native surface roads.
- With grass-seeded outflows when near typed waters.

7.3 Water Bars

Water bars divert surface water directly across the road and fill slopes to the forest floor (Figure 3.7).

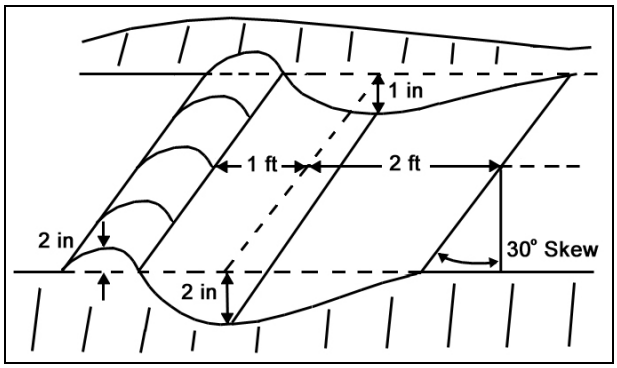

Figure 3.7 Diagram of a water bar

General water bar BMPs

- Install water bars at a gradient steep enough to provide self-cleaning drainage with minimal maintenance:
  - For roads greater than 3% grade, skew at least 30 degrees from perpendicular to the centerline.
  - For roads less than 3% grade or at the bottom of a dip, install them perpendicular to the centerline.
- Locate outflows on stable areas.
- Construct water bars into the cut slope to block the ditch. These act as “safety valves" for failed relief culverts. They work best as temporary measures on low traffic roads with an inadequate number of relief culverts.
- Armor water bars at potential scour points (outflows, trench bottoms) with rock or other energy dissipaters.
- Construct temporary water bars for over-wintering by dumping piles of surfacing rock on the road. Later, grade them out for surfacing material.

7.4 Drainage Diversions

In rare circumstances (e.g., approaches to streams with wet weather haul), install diversion structures to drain the surface of the roadway (Figure 3.8). These work best on low traffic roads and include:

- I-beams set in the road surface with edges on grade and at a 30 degree skew to the road centerline. The I-beam acts as a gutter to collect surface runoff and carry it away from the road surface.
- Rubber strips installed in the road surface at a 30 degree skew to the road centerline (Figure 3.8). Mount the strips on buried wood or steel beams making sure that they stick above the road surface. Studies identified the following limitations to these surface water deflectors:
  - PVC belting tends not to rebound well under traffic and bends over parallel to the road grade. Rubber-laminated belting has less of this problem.
  - Road grading can rip these diversion structures out.
  - Heavy winter hauling causes the top of some belting to fray and delaminate.
  - On road grades less than 6%, potholes formed in the wheel ruts on the uphill side of the rubber strip.

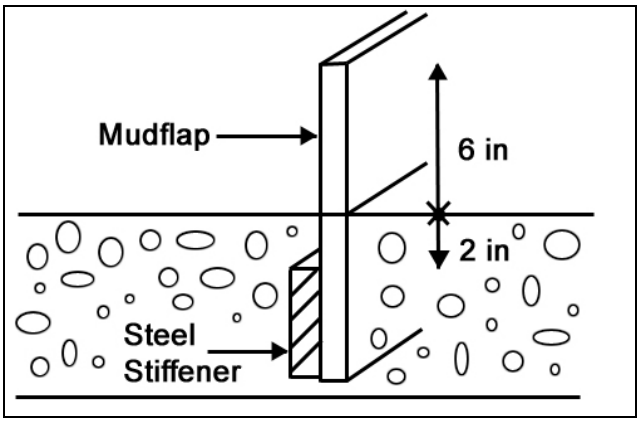

Figure 3.8 Diagram of rubber strip diversion structure

7.5 Ditches

Ditches carry road runoff water to drainage structures.

Installation BMPs

- Typically, ditches should be at least one foot deeper than the road prism and have an approximate 2:1 slope on either side.
- If the ditch has the potential to drain a wetland, refer to WAC 222-24-015.

Maintenance BMPs

- Maintain ditch vegetation within 100 feet of water crossings. Vegetation filters sediment from ditch flow.
- Pull ditches only when necessary to maintain drainage. This helps maintain ditch function during a major storm event.
- Clean ditches of all debris generated during logging. Place this material on the downhill side of the road near the base of the fill.
- Do not undercut the road cut slope.
- Match equipment with the type of maintenance work required. Excessive excavation will create potential sediment delivery.
- Remove slides from the ditches and roadway. See 4.2 Compaction and Stabilization.

7.6 Energy Dissipaters

The location and design of energy dissipaters is critical to prevent concentrated water runoff flows and gully formation on fill slopes or the forest floor. Install energy dissipaters on:

- Slopes greater than 60%.
- Erosive soils.
- Drainage structure outfalls.

Energy dissipaters include:

- Flumes or downspouts (half culverts staked into place).
- Large rock placed below outfall.
- Large woody material placed below outfall.

PART 8. ROAD ABANDONMENT

(Rules are in WAC 222-24-052(3).)

The goal of road abandonment is to re-establish the natural drainage and to leave the *road prism* in a condition that will not damage public resources or pose a risk to public safety. Abandoned roads do not require maintenance. See 4.3 Erosion Control.

8.1 Prioritizing Roads for Abandonment

Consider abandonment of chronic problem roads that require frequent maintenance to protect public resources, such as:

- Stream adjacent parallel roads.
- Roads within a riparian management zone.
- Areas with uncontrollable erosion and/or sediment delivery to typed waters.
- Water crossing failures.
- Cut and fill slope failures.

8.2 Side Cast and Fill Removal BMPs

Remove side cast and fills if failures have the potential to damage a public resource or pose a risk to public safety. Areas to look for include:

- Cracks and slumps in the road surface or shoulder.
- On unstable slopes or landforms (see Board Manual Section 16, Guidelines for Evaluating Potentially Unstable Slopes and Landforms). The material should be end hauled to a stable location.
- Where the weight and volume of side cast material could cause a slide.

Removal methods:

- Place all excavated material against the cut slope or other stable location. Do not place in areas on the road surface that will allow water to pond.
- On steep slopes in high rainfall areas, do not place excavated material on the road surface. This material will become saturated and unstable.

8.3 Water Crossing Removal BMPs

Removing water crossing structures restores the natural drainage of streams. When removing water crossing structures:

- A completed FPA/N from DNR may be required. An HPA from WDFW may be required.
- Re-establish the natural streambed as close to the original location as possible and so it matches the up and downstream width and gradient characteristics.
- Place all excavated material in stable locations.
- Leave stream channels and side slopes at a stable angle.

8.4 Drainage BMPs

Install self-maintaining drainage structures that will not require future maintenance. Provide for drainage by:

- Removing relief culverts. Make sure side slopes are left at a stable angle.
- Removing berms or punching holes in them so they drain to a stable location.
- Ripping the road surface to promote re-vegetation.

- Installing non-drivable water bars:
  - To intercept the ditch. Make sure to key the water bar into the road cut-slope.
  - To direct outflow onto stable locations.
  - That are appropriately skewed:
    - For roads greater than 3% grade, skew at least 30 degrees from perpendicular to the centerline.
    - For roads less than 3% grade or at the bottom of a dip, install them perpendicular to the centerline.
  - At a spacing to disperse runoff and minimize erosion and sedimentation.
  - At natural drainage points.

PART 9. ROCK PITS AND QUARRIES

(Rules are in WAC 222-24-060.)

General maintenance and operation BMPs

- Excavate and maintain sediment retention ponds when needed.
- Protect all typed waters from sediment delivery due to erosion. See 4.3 Erosion Control.
- Know and comply with regulations regarding storage, handling, application, and disposal of all chemicals and fuels. Follow all label instructions.
- Develop a contingency plan for spills, including clean-up procedures and proper notification. Keep this plan on site while operating.
- Store fuel and other chemicals in a bermed area to minimize potential delivery to surface waters or wetland management zones.

GLOSSARY

Bio-matting is a biodegradable woven mat that comes in various lengths. It is rolled in place and then staked to help stabilize slopes. Includes **fiber mats**.

Fish passage barriers are any artificial in-stream structures that impede the free passage of fish.

Full bench road construction is a road constructed on a side hill without using the material removed from the hillside as a part of the road (Figure 3.9). This is common on steep and/or unstable ground. Two methods to remove spoil material (excess material cut from the hillside) are:

- "End hauling", where the spoil material is hauled to a suitable waste area.
- "Overhaul", where the spoil material is pushed to a suitable waste area.

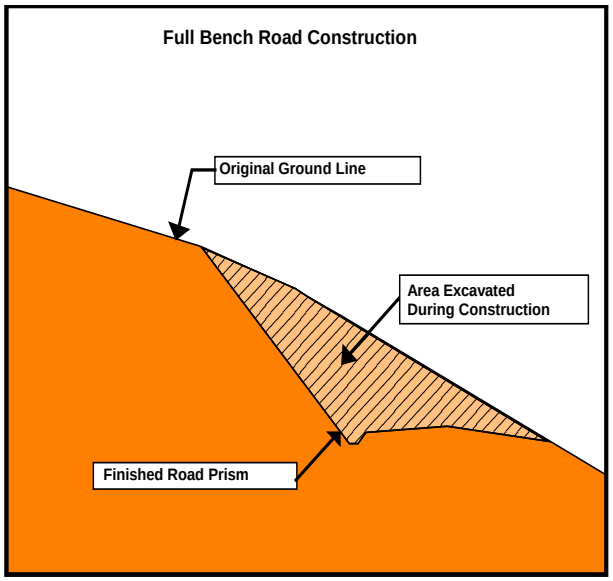

Figure 3.9 Diagram demonstrating full bench construction.

Geotextile is a fabric mat that allows water to drain through it while supporting the materials located above it.

Mitered culverts are culverts that have had the inlet or outlet cut to fit the angle of the fill slope.

Road Prism is the area of the ground containing the road surface, cut slope, and fill slope. See Figure 3.10.

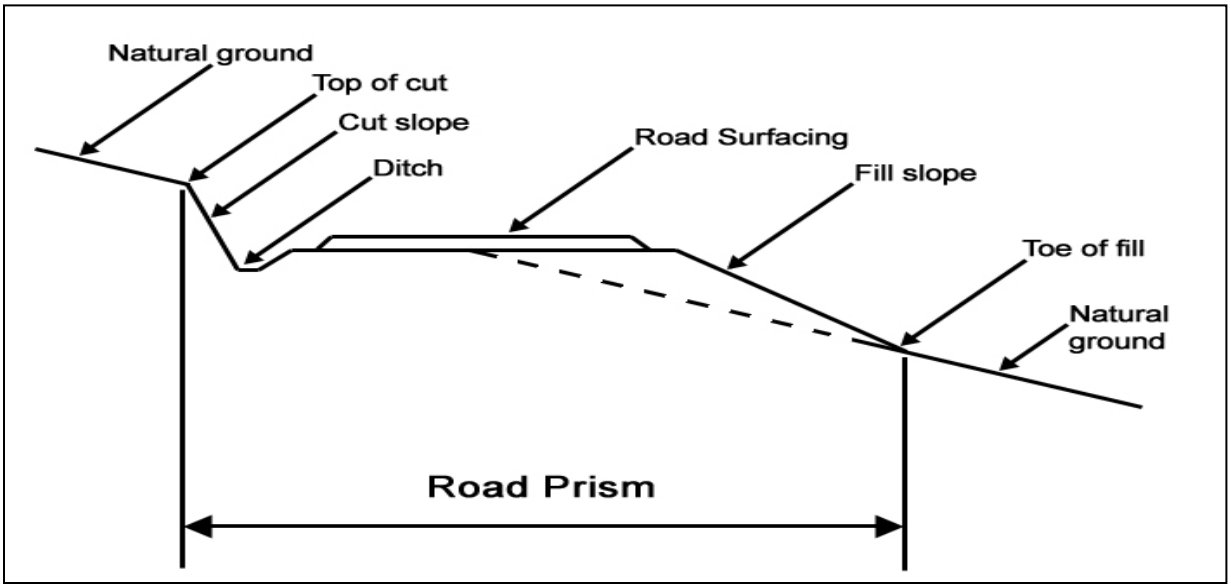

Figure 3.10 Diagram showing the road prism.

Sediment traps are small temporary pooling areas, which collect and store sediment before diverting runoff water onto the forest floor. Sediment traps are usually excavated or constructed earthen embankments with a gravel outlet. Examples include:

> **Check dams** constructed in a ditch to decrease flow velocities, minimize channel scour, and capture and store sediment.
>
> **Dead sumps** are sediment traps without an outlet.

Silt fence is a tightly woven plastic fabric that comes in long rolls. The fabric is strung between wooden stakes. Silt fences are often used adjacent to waterways to prevent sediment from entering water. They are also used adjacent to disturbed soil areas to control erosion.

Spoils are excavated soils deposited in approved waste soil areas.

Straw blankets are made of straw stitched to a single net.

Straw wattles are tubes of straw used for erosion control, sediment control and runoff control. Wattles help to stabilize slopes by shortening the slope length and by slowing, spreading, and filtering overland water flow. This helps to prevent sheet erosion as well as rill and gully development, both of which occur when runoff flows uninterrupted down a slope.

Slash filter windrows are erosion control structures constructed of piled slash in a continuous row along the base of fill slopes. They are especially useful on fill slopes above water crossing culverts to catch road surface runoff that is flowing on the outside of the road.

RESOURCES

British Columbia Ministry of Forests, Forest Practices Code of British Columbia, Forest Road Engineering Guidebook, Second Edition, June 2002. www.gov.bc.ca/

Fifield, Jerals S. (2002). Field manual on sediment and erosion control best management practices for contractors and inspectors. Forester Communications. (Preface states that no part of book can be reproduced or utilized in any form or by any means, electronic or mechanical, including photocopying, recording, or by any information storage and retrieval system, without written permission from the publisher.)

Johansen, David Kim, 1997. Relief Culverts. San Dimas Technology and Development Center. United States Department of Agriculture, Forest Service, Technology and Development Program. 9777 1812—SDTDC.

Minnesota Forest Resources Council: http://www.frc.state.mn.us

National Council for Air and Stream improvements, Inc. (NCASI). 2000. Handbook of control and mitigation measures for silvicultural operations. Unpublished draft Technical Bulletin. Research Triangle park, NC.: National Council for Air and Stream Improvement, Inc.

Oregon Department of Forestry, Forest Roads Manual, June 2000.

USDA Natural Resources Conservation Service. 1996. Engineering Field Handbook – Streambank and Shoreline Protection. Part 650, Chapter 16. [local NRCS office]

USDA Natural Resources Conservation Service. 1996. *Watershed Technology Electronic Catalog*. [//www.wcc.nrcs.usda.gov/wtec/wtec.html]

USDA Forest Service (USFS). 2000. Water/Road Interaction Technology Series: "Diversion Potential at Road-Stream Crossings"; "Response of Road-Stream Crossings to Large Flood Events in Washington, Oregon, and Northern California" By M. Furniss et al., Technology and Development Program. San Dimas, CA. [(909)599-1267]

Washington State Department of Ecology, Permit Assistance Center, http://www.ecy.wa.gov

Washington State Department of Fish and Wildlife, HPA, http://wdfw.wa.gov/habitat

Washington Dept. of Fish and Wildlife. 1999. Fish Passage Design at Road Culverts: A design manual for fish passage at road crossings. Olympia WA. [//dfw.wa.gov]

Wetland plant indicators: http://plants.usda.gov